- **Low Supply-Voltage Range, 2.7 V to 3.6 V**
- **Ultra-Low Power Consumption:**
  - **Active Mode: 400 μA at 1 MHz, 3.0 V**
  - **Standby Mode: 1.6 μA**
  - **Off Mode (RAM Retention): 0.1 μA**
- **Five Power-Saving Modes**
- **Wake-Up From Standby Mode in Less Than 6 μs**
- **Frequency-Locked Loop, FLL+**
- **16-Bit RISC Architecture, 125-ns Instruction Cycle Time**
- **Embedded Signal Processing for Single-Phase Energy Metering With Integrated Analog Front-End and Temperature Sensor (ESP430CE1A)**
- **16-Bit Timer_A With Three Capture/Compare Registers**
- **Integrated LCD Driver for 128 Segments**
- **Serial Communication Interface (USART), Asynchronous UART or Synchronous SPI Selectable by Software**
- **Brownout Detector**
- **Supply Voltage Supervisor/Monitor With Programmable Level Detection**
- **Serial Onboard Programming, No External Programming Voltage Needed, Programmable Code Protection by Security Fuse**
- **Bootstrap Loader in Flash Devices**
- **Family Members Include:**
  - **MSP430FE423A:**
    8KB + 256B Flash Memory, 256B RAM
  - **MSP430FE425A:**
    16KB + 256B Flash Memory, 512B RAM
  - **MSP430FE427A:**
    32KB + 256B Flash Memory, 1KB RAM
- **Available in 64-Pin Quad Flat Pack (QFP)**
- **For Complete Module Descriptions, Refer to the *MSP430x4xx Family User's Guide*, Literature Number SLAU056**

description

The Texas Instruments MSP430 family of ultra-low-power microcontrollers consist of several devices featuring different sets of peripherals targeted for various applications. The architecture, combined with five low power modes, is optimized to achieve extended battery life in portable measurement applications. The device features a powerful 16-bit RISC CPU, 16-bit registers, and constant generators that contribute to maximum code efficiency. The digitally controlled oscillator (DCO) allows wake-up from low-power modes to active mode in less than 6 μs.

The MSP430FE42xA series are microcontroller configurations with three independent 16-bit sigma-delta A/D converters and embedded signal processor core used to measure and calculate single-phase energy in both 2-wire and 3-wire configurations. Also included are a built-in 16-bit timer, 128 LCD segment drive capability, and 14 I/O pins.

Typical applications include 2-wire and 3-wire single-phase metering including tamper-resistant meter implementations.

This integrated circuit can be damaged by ESD. Texas Instruments recommends that all integrated circuits be handled with appropriate precautions. Failure to observe proper handling and installation procedures can cause damage. ESD damage can range from subtle performance degradation to complete device failure. Precision integrated circuits may be more susceptible to damage because very small parametric changes could cause the device not to meet its published specifications. These devices have limited built-in ESD protection.

Please be aware that an important notice concerning availability, standard warranty, and use in critical applications of Texas Instruments semiconductor products and disclaimers thereto appears at the end of this data sheet.

PRODUCTION DATA information is current as of publication date. Products conform to specifications per the terms of Texas Instruments standard warranty. Production processing does not necessarily include testing of all parameters.

Copyright © 2008 Texas Instruments Incorporated

AVAILABLE OPTIONS

T_A	PACKAGED DEVICES
	PLASTIC 64-PIN QFP (PM)
–40°C to 85°C	MSP430FE423AIPM MSP430FE425AIPM MSP430FE427AIPM

pin designation†

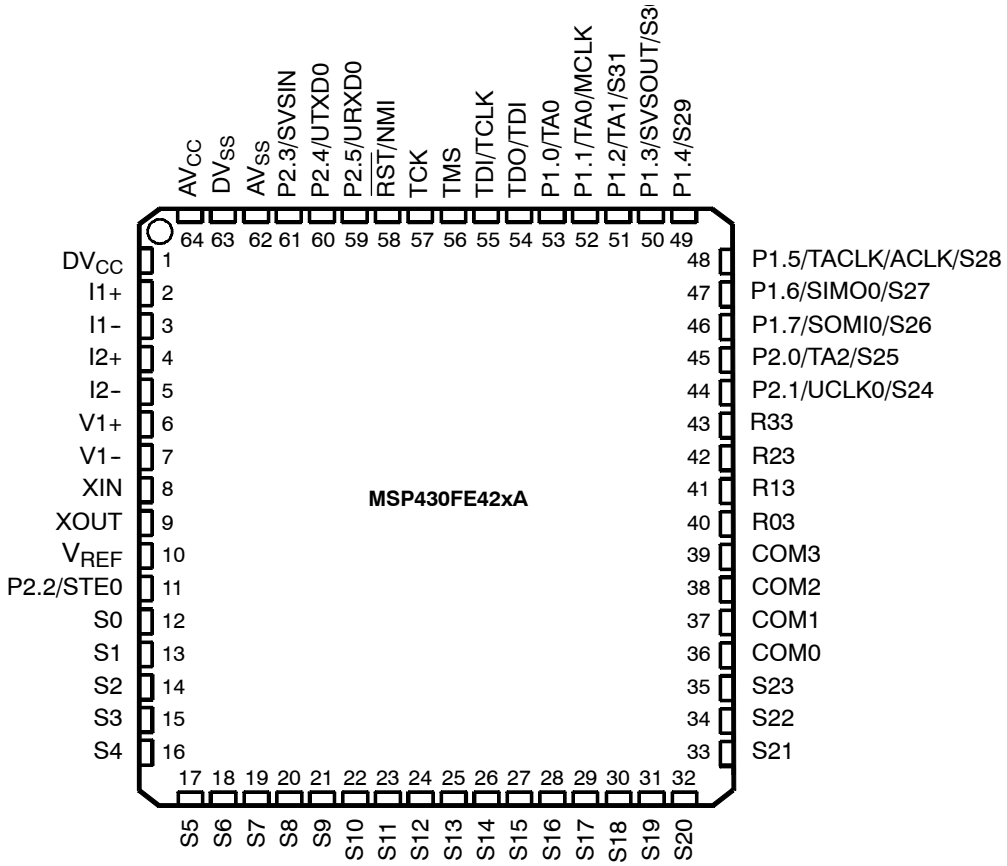

† It is recommended to short unused analog input pairs and connect them to analog ground.

functional block diagram

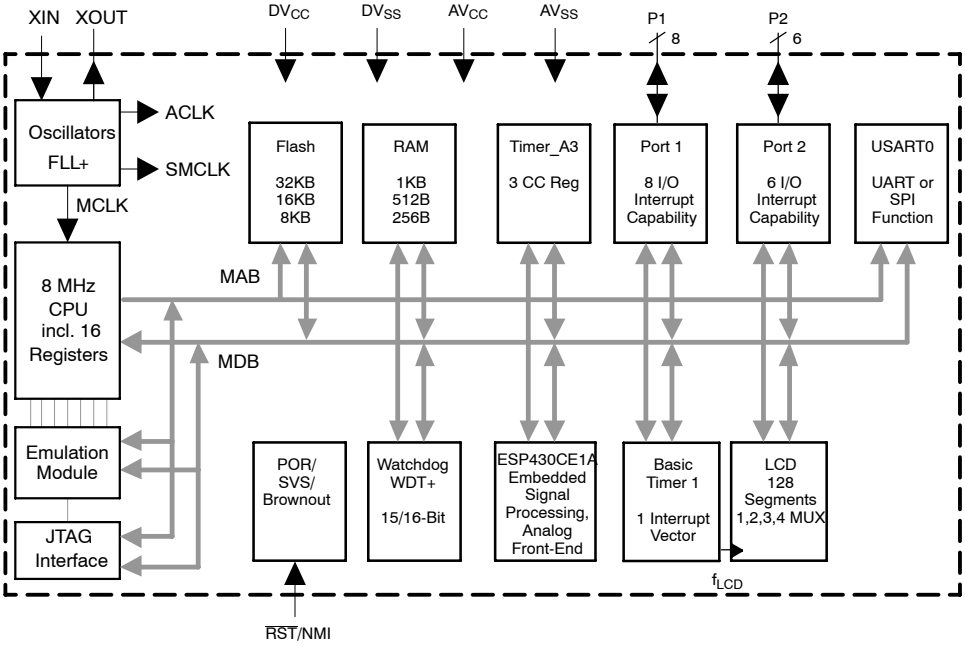

Terminal Functions

TERMINAL NAME	NO.	I/O	DESCRIPTION
DV_{CC}	1		Digital supply voltage, positive terminal.
I_1+	2	I	Current 1 positive analog input. Internal connection to SD16 Channel 0 A0+. (see Note 1)
I_1–	3	I	Current 1 negative analog input. Internal connection to SD16 Channel 0 A0–. (see Note 1)
I_2+	4	I	Current 2 positive analog input. Internal connection to SD16 Channel 1 A0+. (see Note 1)
I_2–	5	I	Current 2 negative analog input. Internal connection to SD16 Channel 1 A0–. (see Note 1)
V_1+	6	I	Voltage 1 positive analog input. Internal connection to SD16 Channel 2 A0+. (see Note 1)
V_1–	7	I	Voltage 1 negative analog input. Internal connection to SD16 Channel 2 A0–. (see Note 1)
XIN	8	I	Input for crystal oscillator XT1. Standard or watch crystals can be connected.
XOUT	9	O	Output of crystal oscillator XT1
V_{REF}	10	I/O	Input for an external reference voltage / internal reference voltage output (can be used as mid-voltage)
P2.2/STE0	11	I/O	General-purpose digital I/O / slave transmit enable—USART0/SPI mode
S0	12	O	LCD segment output 0
S1	13	O	LCD segment output 1
S2	14	O	LCD segment output 2
S3	15	O	LCD segment output 3
S4	16	O	LCD segment output 4
S5	17	O	LCD segment output 5
S6	18	O	LCD segment output 6
S7	19	O	LCD segment output 7
S8	20	O	LCD segment output 8
S9	21	O	LCD segment output 9
S10	22	O	LCD segment output 10
S11	23	O	LCD segment output 11
S12	24	O	LCD segment output 12
S13	25	O	LCD segment output 13
S14	26	O	LCD segment output 14
S15	27	O	LCD segment output 15
S16	28	O	LCD segment output 16
S17	29	O	LCD segment output 17
S18	30	O	LCD segment output 18
S19	31	O	LCD segment output 19
S20	32	O	LCD segment output 20
S21	33	O	LCD segment output 21
S22	34	O	LCD segment output 22
S23	35	O	LCD segment output 23
COM0	36	O	Common output COM0–3 are used for LCD backplanes.
COM1	37	O	Common output COM0–3 are used for LCD backplanes.
COM2	38	O	Common output COM0–3 are used for LCD backplanes.
COM3	39	O	Common output COM0–3 are used for LCD backplanes.
R03	40	I	Input of fourth positive (lowest) analog LCD level (V5)

NOTE 1: It is recommended to short unused analog input pairs and connect them to analog ground.

Terminal Functions (Continued)

TERMINAL NAME	NO.	I/O	DESCRIPTION
R13	41	I	Input of third most positive analog LCD level (V4 or V3)
R23	42	I	Input of second most positive analog LCD level (V2)
R33	43	O	Output of most positive analog LCD level (V1)
P2.1/UCLK0/S24	44	I/O	General-purpose digital I/O / external clock input-USART0/UART or SPI mode, clock output—USART0/SPI mode / LCD segment output 24 (See Note 1)
P2.0/TA2/S25	45	I/O	General-purpose digital I/O / Timer_A Capture: CCI2A input, Compare: Out2 output / LCD segment output 25 (See Note 1)
P1.7/SOMI0/S26	46	I/O	General-purpose digital I/O / slave out/master in of USART0/SPI mode / LCD segment output 26 (See Note 1)
P1.6/SIMO0/S27	47	I/O	General-purpose digital I/O / slave in/master out of USART0/SPI mode / LCD segment output 27 (See Note 1)
P1.5/TACLK/ ACLK/S28	48	I/O	General-purpose digital I/O / Timer_A and SD16 clock signal TACLK input / ACLK output (divided by 1, 2, 4, or 8) / LCD segment output 28 (See Note 1)
P1.4/S29	49	I/O	General-purpose digital I/O / LCD segment output 29 (See Note 1)
P1.3/SVSOUT/ S30	50	I/O	General-purpose digital I/O / SVS: output of SVS comparator / LCD segment output 30 (See Note 1)
P1.2/TA1/S31	51	I/O	General-purpose digital I/O / Timer_A, Capture: CCI1A, CCI1B input, Compare: Out1 output / LCD segment output 31 (See Note 1)
P1.1/TA0/MCLK	52	I/O	General-purpose digital I/O / Timer_A, Capture: CCI0B input / MCLK output. Note: TA0 is only an input on this pin / BSL receive
P1.0/TA0	53	I/O	General-purpose digital I/O / Timer_A, Capture: CCI0A input, Compare: Out0 output / BSL transmit
TDO/TDI	54	I/O	Test data output. TDO/TDI data output or programming data input terminal.
TDI/TCLK	55	I	Test data input or test clock input. The device protection fuse is connected to TDI.
TMS	56	I	Test mode select. TMS is used as an input port for device programming and test.
TCK	57	I	Test clock. TCK is the clock input port for device programming and test.
$\overline{RST}$/NMI	58	I	Reset input or nonmaskable interrupt input port
P2.5/URXD0	59	I/O	General-purpose digital I/O / receive data in—USART0/UART mode
P2.4/UTXD0	60	I/O	General-purpose digital I/O / transmit data out—USART0/UART mode
P2.3/SVSIN	61	I/O	General-purpose digital I/O / Analog input to brownout, supply voltage supervisor
AV_{SS}	62		Analog supply voltage, negative terminal. Supplies SD16, SVS, brownout, oscillator, and LCD resistive divider circuitry.
DV_{SS}	63		Digital supply voltage, negative terminal.
AV_{CC}	64		Analog supply voltage, positive terminal. Supplies SD16, SVS, brownout, oscillator, and LCD resistive divider circuitry; must not power up prior to DV_{CC}.

NOTE 1: LCD function selected automatically when applicable LCD module control bits are set, not with PxSEL bits.

short-form description

CPU

The MSP430 CPU has a 16-bit RISC architecture that is highly transparent to the application. All operations, other than program-flow instructions, are performed as register operations in conjunction with seven addressing modes for source operand and four addressing modes for destination operand.

The CPU is integrated with 16 registers that provide reduced instruction execution time. The register-to-register operation execution time is one cycle of the CPU clock.

Four of the registers, R0 to R3, are dedicated as program counter, stack pointer, status register, and constant generator, respectively. The remaining registers are general-purpose registers.

Peripherals are connected to the CPU using data, address, and control buses, and can be handled with all instructions.

instruction set

The instruction set consists of 51 instructions with three formats and seven address modes. Each instruction can operate on word and byte data. Table 1 shows examples of the three types of instruction formats; the address modes are listed in Table 2.

Table 1. Instruction Word Formats

Dual operands, source-destination	e.g,. ADD R4,R5	R4 + R5 ---> R5
Single operands, destination only	e.g., CALL R8	PC -->(TOS), R8--> PC
Relative jump, un/conditional	e.g., JNE	Jump-on-equal bit = 0

Table 2. Address Mode Descriptions

ADDRESS MODE	S	D	SYNTAX	EXAMPLE	OPERATION
Register	●	●	MOV Rs,Rd	MOV R10,R11	R10 --> R11
Indexed	●	●	MOV X(Rn),Y(Rm)	MOV 2(R5),6(R6)	M(2+R5)--> M(6+R6)
Symbolic (PC relative)	●	●	MOV EDE,TONI		M(EDE) --> M(TONI)
Absolute	●	●	MOV &MEM,&TCDAT		M(MEM) --> M(TCDAT)
Indirect	●		MOV @Rn,Y(Rm)	MOV @R10,Tab(R6)	M(R10) --> M(Tab+R6)
Indirect autoincrement	●		MOV @Rn+,Rm	MOV @R10+,R11	M(R10) --> R11 R10 + 2--> R10
Immediate	●		MOV #X,TONI	MOV #45,TONI	#45 --> M(TONI)

NOTE: S = source, D = destination

operating modes

The MSP430 has one active mode and five software selectable low-power modes of operation. An interrupt event can wake up the device from any of the five low-power modes, service the request, and restore back to the low-power mode on return from the interrupt program.

The following six operating modes can be configured by software:

- Active mode (AM)
  - All clocks are active.
- Low-power mode 0 (LPM0)
  - CPU is disabled.
    ACLK and SMCLK remain active, MCLK is available to modules.
    FLL+ loop control remains active.
- Low-power mode 1 (LPM1)
  - CPU is disabled.
    ACLK and SMCLK remain active, MCLK is available to modules.
    FLL+ loop control is disabled.
- Low-power mode 2 (LPM2)
  - CPU is disabled.
    MCLK, FLL+ loop control, and DCOCLK are disabled.
    DCO dc generator remains enabled.
    ACLK remains active.
- Low-power mode 3 (LPM3)
  - CPU is disabled.
    MCLK, FLL+ loop control, and DCOCLK are disabled.
    DCO dc generator is disabled.
    ACLK remains active.
- Low-power mode 4 (LPM4)
  - CPU is disabled.
    ACLK is disabled.
    MCLK, FLL+ loop control, and DCOCLK are disabled.
    DCO dc generator is disabled.
    Crystal oscillator is stopped.

interrupt vector addresses

The interrupt vectors and the power-up starting address are located in the address range of 0FFFFh to 0FFE0h. The vector contains the 16-bit address of the appropriate interrupt-handler instruction sequence.

INTERRUPT SOURCE	INTERRUPT FLAG	SYSTEM INTERRUPT	WORD ADDRESS	PRIORITY
Power-up External reset Watchdog Flash memory PC out-of-range (see Note 4)	WDTIFG KEYV (see Note 1)	Reset	0FFFEh	15, highest
NMI Oscillator fault Flash memory access violation	NMIIFG (see Notes 1 and 3) OFIFG (see Notes 1 and 3) ACCVIFG (see Notes 1 and 3)	(Non)maskable (Non)maskable (Non)maskable	0FFFCh	14
ESP430	MBCTL_OUTxIFG, MBCTL_INxIFG (see Notes 1 and 2)	Maskable	0FFFAh	13
SD16	SD16CCTLx SD16OVIFG, SD16CCTLx SD16IFG (see Notes 1 and 2)	Maskable	0FFF8h	12
			0FFF6h	11
Watchdog timer	WDTIFG	Maskable	0FFF4h	10
USART0 receive	URXIFG0	Maskable	0FFF2h	9
USART0 transmit	UTXIFG0	Maskable	0FFF0h	8
			0FFEEh	7
Timer_A3	TACCR0 CCIFG (see Note 2)	Maskable	0FFECh	6
Timer_A3	TACCR1 and TACCR2 CCIFGs, and TACTL TAIFG (see Notes 1 and 2)	Maskable	0FFEAh	5
I/O port P1 (eight flags)	P1IFG.0 to P1IFG.7 (see Notes 1 and 2)	Maskable	0FFE8h	4
			0FFE6h	3
			0FFE4h	2
I/O port P2 (eight flags)	P2IFG.0 to P2IFG.7 (see Notes 1 and 2)	Maskable	0FFE2h	1
Basic Timer1	BTIFG	Maskable	0FFE0h	0, lowest

NOTES:
1. Multiple source flags
2. Interrupt flags are located in the module.
3. (Non)maskable: the individual interrupt-enable bit can disable an interrupt event, but the general interrupt-enable cannot.
4. A reset is generated if the CPU tries to fetch instructions from within the module register memory address range (0h to 01FFh) or from within unused address ranges (from 0600h to 0BFFh).

special function registers

Most interrupt and module enable bits are collected into the lowest address space. Special function register bits that are not allocated to a functional purpose are not physically present in the device. Simple software access is provided with this arrangement.

interrupt enable 1 and 2

Address	7	6	5	4	3	2	1	0
0h	UTXIE0	URXIE0	ACCVIE	NMIIE			OFIE	WDTIE
	rw–0	rw–0	rw–0	rw–0			rw–0	rw–0

WDTIE: Watchdog timer interrupt enable. Inactive if watchdog mode is selected. Active if watchdog timer is configured in interval timer mode.

OFIE: Oscillator fault interrupt enable

NMIIE: Nonmaskable interrupt enable

ACCVIE: Flash access violation interrupt enable

URXIE0: USART0: UART and SPI receive interrupt enable

UTXIE0: USART0: UART and SPI transmit interrupt enable

Address	7	6	5	4	3	2	1	0
1h	BTIE							
	rw-0							

BTIE: Basic Timer1 interrupt enable

interrupt flag register 1 and 2

Address	7	6	5	4	3	2	1	0
02h	UTXIFG0	URXIFG0		NMIIFG			OFIFG	WDTIFG
	rw–1	rw–0		rw–0			rw–1	rw–(0)

WDTIFG: Set on watchdog timer overflow (in watchdog mode) or security key violation. Reset on V_{CC} power up or a reset condition at the $\overline{RST}$/NMI pin in reset mode.

OFIFG: Flag set on oscillator fault

NMIIFG: Set via $\overline{RST}$/NMI pin

URXIFG0: USART0: UART and SPI receive flag

UTXIFG0: USART0: UART and SPI transmit flag

Address	7	6	5	4	3	2	1	0
3h	BTIFG							
	rw-0							

BTIFG: Basic Timer1 interrupt flag

module enable registers 1 and 2

Address	7	6	5	4	3	2	1	0
04h	UTXE0	URXE0 USPIE0						
	rw–0	rw–0						

URXE0: USART0: UART mode receive enable

UTXE0: USART0: UART mode transmit enable

USPIE0: USART0: SPI mode transmit and receive enable

Address	7	6	5	4	3	2	1	0
05h								

Legend: **rw–0,1:** **Bit Can Be Read and Written. It Is Reset or Set by PUC.**
rw–(0,1): **Bit Can Be Read and Written. It Is Reset or Set by POR.**
SFR Bit Not Present in Device.

memory organization

		MSP430FE423A	MSP430FE425A	MSP430FE427A
Memory	Size	8KB	16KB	32KB
Interrupt vector	Flash	0FFFFh to 0FFE0h	0FFFFh to 0FFE0h	0FFFFh to 0FFE0h
Code memory	Flash	0FFFFh to 0E000h	0FFFFh to 0C000h	0FFFFh to 08000h
Information memory	Size	256 Byte 010FFh to 01000h	256 Byte 010FFh to 01000h	256 Byte 010FFh to 01000h
Boot memory	Size	1kB 0FFFh to 0C00h	1kB 0FFFh to 0C00h	1kB 0FFFh to 0C00h
RAM	Size	256 Byte 02FFh to 0200h	512 Byte 03FFh to 0200h	1KB 05FFh to 0200h
Peripherals	16-bit	01FFh to 0100h	01FFh to 0100h	01FFh to 0100h
	8-bit	0FFh to 010h	0FFh to 010h	0FFh to 010h
	8-bit SFR	0Fh to 00h	0Fh to 00h	0Fh to 00h

bootstrap loader (BSL)

The MSP430 bootstrap loader (BSL) enables users to program the flash memory or RAM using a UART serial interface. Access to the MSP430 memory via the BSL is protected by user-defined password. For complete description of the features of the BSL and its implementation, see the Application report *Features of the MSP430 Bootstrap Loader*, Literature Number SLAA089.

BSL FUNCTION	PM PACKAGE PINS
Data transmit	53 - P1.0
Data receive	52 - P1.1

flash memory

The flash memory can be programmed via the JTAG port, the bootstrap loader, or in-system by the CPU. The CPU can perform single-byte and single-word writes to the flash memory. Features of the flash memory include:

- Flash memory has n segments of main memory and two segments of information memory (A and B) of 128 bytes each. Each segment in main memory is 512 bytes in size.
- Segments 0 to n may be erased in one step, or each segment may be individually erased.
- Segments A and B can be erased individually, or as a group with segments 0 to n. Segments A and B are also called *information memory.*
- New devices may have some bytes programmed in the information memory (needed for test during manufacturing). The user should perform an erase of the information memory prior to the first use.

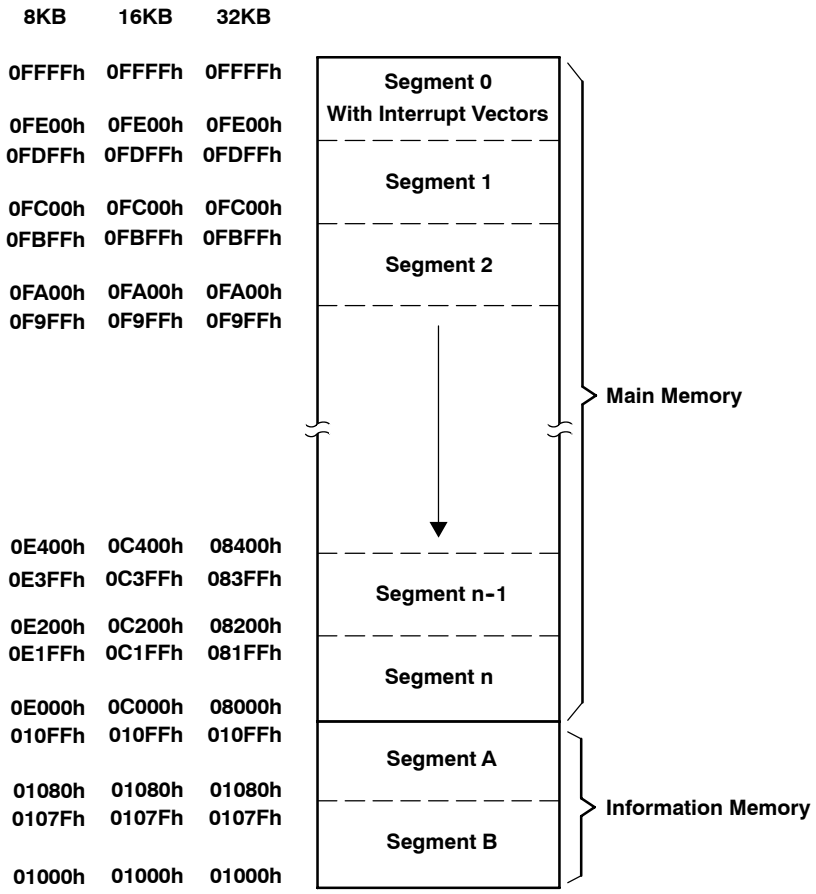

peripherals

Peripherals are connected to the CPU through data, address, and control busses and can be handled using all instructions. For complete module descriptions, refer to the *MSP430x4xx Family User's Guide*, literature number SLAU056.

oscillator and system clock

The clock system in the MSP430FE42xA family of devices is supported by the FLL+ module that includes support for a 32768-Hz watch crystal oscillator, an internal digitally-controlled oscillator (DCO) and a high-frequency crystal oscillator. The FLL+ clock module is designed to meet the requirements of both low system cost and low power consumption. The FLL+ features a digital frequency locked loop (FLL) hardware that, in conjunction with a digital modulator, stabilizes the DCO frequency to a programmable multiple of the watch crystal frequency. The internal DCO provides a fast turn-on clock source and stabilizes in less than 6 μs. The FLL+ module provides the following clock signals:

- Auxiliary clock (ACLK), sourced from a 32768-Hz watch crystal or a high-frequency crystal.
- Main clock (MCLK), the system clock used by the CPU.
- Sub-Main clock (SMCLK), the sub-system clock used by the peripheral modules.
- ACLK/n, the buffered output of ACLK, ACLK/2, ACLK/4, or ACLK/8.

brownout, supply voltage supervisor (SVS)

The brownout circuit is implemented to provide the proper internal reset signal to the device during power on and power off. The SVS circuitry detects if the supply voltage drops below a user selectable level and supports both supply voltage supervision (the device is automatically reset) and supply voltage monitoring (SVM) (the device is not automatically reset).

The CPU begins code execution after the brownout circuit releases the device reset. However, V_{CC} may not have ramped to $V_{CC(min)}$ at that time. The user must ensure the default FLL+ settings are not changed until V_{CC} reaches $V_{CC(min)}$. If desired, the SVS circuit can be used to determine when V_{CC} reaches $V_{CC(min)}$.

digital I/O

There are two 8-bit I/O ports implemented—ports P1 and P2 (only six P2 I/O signals are available on external pins):

- All individual I/O bits are independently programmable.
- Any combination of input, output, and interrupt conditions is possible.
- Edge-selectable interrupt input capability for all the eight bits of port P1 and six bits of P2.
- Read/write access to port-control registers is supported by all instructions.

NOTE:
Six bits of port P2, P2.0 to P2.5, are available on external pins - but all control and data bits for port P2 are implemented.

Basic Timer1

The Basic Timer1 has two independent 8-bit timers that can be cascaded to form a 16-bit timer/counter. Both timers can be read and written by software. The Basic Timer1 can be used to generate periodic interrupts and clock for the LCD module.

LCD drive

The LCD driver generates the segment and common signals required to drive an LCD display. The LCD controller has dedicated data memory to hold segment drive information. Common and segment signals are generated as defined by the mode. Static, 2-MUX, 3-MUX, and 4-MUX LCDs are supported by this peripheral.

WDT+ watchdog timer

The primary function of the watchdog timer (WDT+) module is to perform a controlled system restart after a software problem occurs. If the selected time interval expires, a system reset is generated. If the watchdog function is not needed in an application, the module can be configured as an interval timer and can generate interrupts at selected time intervals.

Timer_A3

Timer_A3 is a 16-bit timer/counter with three capture/compare registers. Timer_A3 can support multiple capture/compares, PWM outputs, and interval timing. Timer_A3 also has extensive interrupt capabilities. Interrupts may be generated from the counter on overflow conditions and from each of the capture/compare registers.

TIMER_A3 SIGNAL CONNECTIONS					
INPUT PIN NUMBER	DEVICE INPUT SIGNAL	MODULE INPUT NAME	MODULE BLOCK	MODULE OUTPUT SIGNAL	OUTPUT PIN NUMBER
48 - P1.5	TACLK	TACLK	Timer	NA	
	ACLK	ACLK			
	SMCLK	SMCLK			
48 - P1.5	$\overline{\text{TACLK}}$	INCLK			
53 - P1.0	TA0	CCI0A	CCR0	TA0	53 - P1.0
52 - P1.1	TA0	CCI0B			
	DV_{SS}	GND			
	DV_{CC}	V_{CC}			
51 - P1.2	TA1	CCI1A	CCR1	TA1	51 - P1.2
51 - P1.2	TA1	CCI1B			
	DV_{SS}	GND			
	DV_{CC}	V_{CC}			
45 - P2.0	TA2	CCI2A	CCR2	TA2	45 - P2.0
	ACLK (internal)	CCI2B			
	DV_{SS}	GND			
	DV_{CC}	V_{CC}			

universal synchronous/asynchronous receive transmit (USART)

The MSP430FE42xA devices have one hardware USART peripheral module (USART0) that is used for serial data communication. The USART supports synchronous SPI (3 or 4 pin) and asynchronous UART communication protocols, using double-buffered transmit and receive channels.

ESP430CE1A

The ESP430CE1A module integrates a hardware multiplier, three independent 16-bit sigma-delta A/D converters (SD16) and an embedded signal processor (ESP430). The ESP430CE1A module measures 2-wire or 3-wire single-phase energy and automatically calculates parameters that are made available to the MSP430 CPU. The module can be calibrated and initialized to accurately calculate energy, power factor, etc., for a wide range of metering sensor configurations.

peripheral file map

PERIPHERALS WITH WORD ACCESS			
Watchdog	Watchdog timer control	WDTCTL	0120h
Timer_A3	Timer_A interrupt vector	TAIV	012Eh
	Timer_A control	TACTL	0160h
	Capture/compare control 0	TACCTL0	0162h
	Capture/compare control 1	TACCTL1	0164h
	Capture/compare control 2	TACCTL2	0166h
	Reserved		0168h
	Reserved		016Ah
	Reserved		016Ch
	Reserved		016Eh
	Timer_A register	TAR	0170h
	Capture/compare register 0	TACCR0	0172h
	Capture/compare register 1	TACCR1	0174h
	Capture/compare register 2	TACCR2	0176h
	Reserved		0178h
	Reserved		017Ah
	Reserved		017Ch
	Reserved		017Eh
Hardware Multiplier (see Note 1)	Sum extend	SUMEXT	013Eh
	Result high word	RESHI	013Ch
	Result low word	RESLO	013Ah
	Second operand	OP2	0138h
	Multiply signed + accumulate/operand 1	MACS	0136h
	Multiply + accumulate/operand 1	MAC	0134h
	Multiply signed/operand 1	MPYS	0132h
	Multiply unsigned/operand 1	MPY	0130h
Flash	Flash control 3	FCTL3	012Ch
	Flash control 2	FCTL2	012Ah
	Flash control 1	FCTL1	0128h
SD16 (see Note 1) (see also: Peripherals With Byte Access)	General control	SD16CTL	0100h
	Channel 0 control	SD16CCTL0	0102h
	Channel 1 control	SD16CCTL1	0104h
	Channel 2 control	SD16CCTL2	0106h
	Reserved		0108h
	Reserved		010Ah
	Reserved		010Ch
	Reserved		010Eh
	Interrupt vector word register	SD16IV	0110h
	Channel 0 conversion memory	SD16MEM0	0112h

NOTE 1: Module is contained within ESP430CE1A. Registers not accessible when ESP430 is active. ESP430 must be disabled or suspended to allow CPU access to these modules.

peripheral file map (continued)

PERIPHERALS WITH WORD ACCESS			
SD16 (continued, see Note 1)	Channel 1 conversion memory	SD16MEM1	0114h
	Channel 2 conversion memory	SD16MEM2	0116h
	Reserved		0118h
	Reserved		011Ah
	Reserved		011Ch
	Reserved		011Eh
ESP430 (ESP430CE1A)	ESP430 control	ESPCTL	0150h
	Mailbox control	MBCTL	0152h
	Mailbox in 0	MBIN0	0154h
	Mailbox in 1	MBIN1	0156h
	Mailbox out 0	MBOUT0	0158h
	Mailbox out 1	MBOUT1	015Ah
	ESP430 return value 0	RET0	01C0h
	:	:	:
	ESP430 return value 31	RET31	01FEh
PERIPHERALS WITH BYTE ACCESS			
SD16 (see Note 1) (see also: Peripherals With Word Access)	Channel 0 input control	SD16INCTL0	0B0h
	Channel 1 input control	SD16INCTL1	0B1h
	Channel 2 input control	SD16INCTL2	0B2h
	Reserved		0B3h
	Reserved		0B4h
	Reserved		0B5h
	Reserved		0B6h
	Reserved		0B7h
	Channel 0 preload	SD16PRE0	0B8h
	Channel 1 preload	SD16PRE1	0B9h
	Channel 2 preload	SD16PRE2	0BAh
	Reserved		0BBh
	Reserved		0BCh
	Reserved		0BDh
	Reserved		0BEh
	Reserved		0BFh
LCD	LCD memory 20	LCDM20	0A4h
	:	:	:
	LCD memory 16	LCDM16	0A0h
	LCD memory 15	LCDM15	09Fh
	:	:	:
	LCD memory 1	LCDM1	091h
	LCD control and mode	LCDCTL	090h

NOTE 1: Module is contained within ESP430CE1A. Registers not accessible when ESP430 is active. ESP430 must be disabled or suspended to allow CPU access to these modules.

peripheral file map (continued)

PERIPHERALS WITH BYTE ACCESS (CONTINUED)			
USART0	Transmit buffer	U0TXBUF	077h
	Receive buffer	U0RXBUF	076h
	Baud rate	U0BR1	075h
	Baud rate	U0BR0	074h
	Modulation control	U0MCTL	073h
	Receive control	U0RCTL	072h
	Transmit control	U0TCTL	071h
	USART control	U0CTL	070h
Brownout, SVS	SVS control register	SVSCTL	056h
FLL+ Clock	FLL+ control 1	FLL_CTL1	054h
	FLL+ control 0	FLL_CTL0	053h
	System clock frequency control	SCFQCTL	052h
	System clock frequency integrator	SCFI1	051h
	System clock frequency integrator	SCFI0	050h
Basic Timer1	BT counter 2	BTCNT2	047h
	BT counter 1	BTCNT1	046h
	BT control	BTCTL	040h
Port P2	Port P2 selection	P2SEL	02Eh
	Port P2 interrupt enable	P2IE	02Dh
	Port P2 interrupt-edge select	P2IES	02Ch
	Port P2 interrupt flag	P2IFG	02Bh
	Port P2 direction	P2DIR	02Ah
	Port P2 output	P2OUT	029h
	Port P2 input	P2IN	028h
Port P1	Port P1 selection	P1SEL	026h
	Port P1 interrupt enable	P1IE	025h
	Port P1 interrupt-edge select	P1IES	024h
	Port P1 interrupt flag	P1IFG	023h
	Port P1 direction	P1DIR	022h
	Port P1 output	P1OUT	021h
	Port P1 input	P1IN	020h
Special Functions	SFR module enable 2	ME2	005h
	SFR module enable 1	ME1	004h
	SFR interrupt flag 2	IFG2	003h
	SFR interrupt flag 1	IFG1	002h
	SFR interrupt enable 2	IE2	001h
	SFR interrupt enable 1	IE1	000h

absolute maximum ratings†

Voltage applied at V_{CC} to V_{SS} . . . . . –0.3 V to + 4.1 V
Voltage applied to any pin (see Note 1) . . . . . –0.3 V to V_{CC} + 0.3 V
Diode current at any device terminal . . . . . ±2 mA
Storage temperature (unprogrammed device) . . . . . –55°C to 150°C
Storage temperature (programmed device) . . . . . –40°C to 85°C

† Stresses beyond those listed under "absolute maximum ratings" may cause permanent damage to the device. These are stress ratings only, and functional operation of the device at these or any other conditions beyond those indicated under "recommended operating conditions" is not implied. Exposure to absolute-maximum-rated conditions for extended periods may affect device reliability.

NOTE 1: All voltages referenced to V_{SS}. The JTAG fuse-blow voltage, V_{FB}, is allowed to exceed the absolute maximum rating. The voltage is applied to the TDI/TCLK pin when blowing the JTAG fuse.

recommended operating conditions (see Note 1)

PARAMETER			MIN	NOM	MAX	UNITS
Supply voltage during program execution; ESP430 and SD16 disabled, V_{CC} (AV_{CC} = DV_{CC} = V_{CC}) (see Note 1)		MSP430FE42xA	1.8		3.6	V
Supply voltage during program execution; SVS enabled, PORON = 1, ESP430 and SD16 disabled, V_{CC} (AV_{CC} = DV_{CC} = V_{CC}) (see Notes 1 and 2)		MSP430FE42xA	2.0		3.6	V
Supply voltage during program execution; ESP430 or SD16 enabled or during programming of flash memory, V_{CC} (AV_{CC} = DV_{CC} = V_{CC}) (see Note 1)		MSP430FE42xA	2.7		3.6	V
Supply voltage (see Note 1), V_{SS} (AV_{SS} = DV_{SS} = V_{SS})			0		0	V
Operating free-air temperature range, T_A		MSP430FE42xA	–40		85	°C
LFXT1 crystal frequency, $f_{(LFXT1)}$ (see Note 3)	LF selected, XTS_FLL = 0	Watch crystal		32768		Hz
	XT1 selected, XTS_FLL = 1	Ceramic resonator	450		8000	kHz
	XT1 selected, XTS_FLL = 1	Crystal	1000		8000	kHz
Processor frequency (signal MCLK), $f_{(System)}$ (see Note 4)		V_{CC} = 2.7 V	DC		8.4	MHz
		V_{CC} = 3.6 V	DC		8.4	

NOTES:
1. It is recommended to power AV_{CC} and DV_{CC} from the same source. A maximum difference of 0.3 V between AV_{CC} and DV_{CC} can be tolerated during power up and operation.
2. The minimum operating supply voltage is defined according to the trip point where POR is going active by decreasing supply voltage. POR is going inactive when the supply voltage is raised above minimum supply voltage plus the hysteresis of the SVS circuitry.
3. The LFXT1 oscillator in LF-mode requires a watch crystal.
4. For frequencies above 8 MHz, MCLK is sourced by the built-in oscillator (DCO and FLL+).

electrical characteristics over recommended operating free-air temperature (unless otherwise noted)

supply current into AV_{CC} + DV_{CC} excluding external current (see Note 1)

PARAMETER		TEST CONDITIONS	V_{CC}	MIN	NOM	MAX	UNIT
$I_{(AM)}$	Active mode, $f_{(MCLK)} = f_{(SMCLK)} = f_{(DCO)}$ = 1 MHz, $f_{(ACLK)}$ = 32,768 Hz, XTS_FLL = 0 (program executes in flash)	T_A = –40°C to 85°C	3 V		400	500	µA
$I_{(LPM0)}$	Low-power mode, (LPM0/LPM1) $f_{(MCLK)} = f_{(SMCLK)} = f_{(DCO)}$ = 1 MHz, $f_{(ACLK)}$ = 32,768 Hz, XTS_FLL = 0 FN_8 = FN_4 = FN_3 = FN_2 = 0 (see Note 2)	T_A = –40°C to 85°C	3 V		130	150	µA
$I_{(LPM2)}$	Low-power mode, (LPM2) (see Note 2)	T_A = –40°C to 85°C	3 V		10	22	µA
$I_{(LPM3)}$	Low-power mode, (LPM3) (see Note 2)	T_A = –40°C	3 V		1.5	2.0	µA
		T_A = 25°C			1.6	2.1	
		T_A = 60°C			1.7	2.2	
		T_A = 85°C			2.0	3.5	
$I_{(LPM4)}$	Low-power mode, (LPM4) (see Note 2)	T_A = –40°C	3 V		0.1	0.5	µA
		T_A = 25°C			0.1	0.5	
		T_A = 85°C			0.8	2.5	

NOTES: 1. All inputs are tied to 0 V or V_{CC}. Outputs do not source or sink any current.
The current consumption in LPM2, LPM3, and LPM4 are measured with active Basic Timer1 and LCD (ACLK selected).
The current consumption of the ESP430CE1A and the SVS module are specified in their respective sections.
LPMx currents measured with WDT+ disabled.
The currents are characterized with a KDS Daishinku DT–38 (6 pF) crystal.
2. Current for brownout included.

current consumption of active mode versus system frequency

$$I_{(AM)} = I_{(AM)\,[1\,MHz]} \times f_{(System)\,[MHz]}$$

current consumption of active mode versus supply voltage

$$I_{(AM)} = I_{(AM)\,[3\,V]} + 170\ \mu A/V \times (V_{CC} - 3\ V)$$

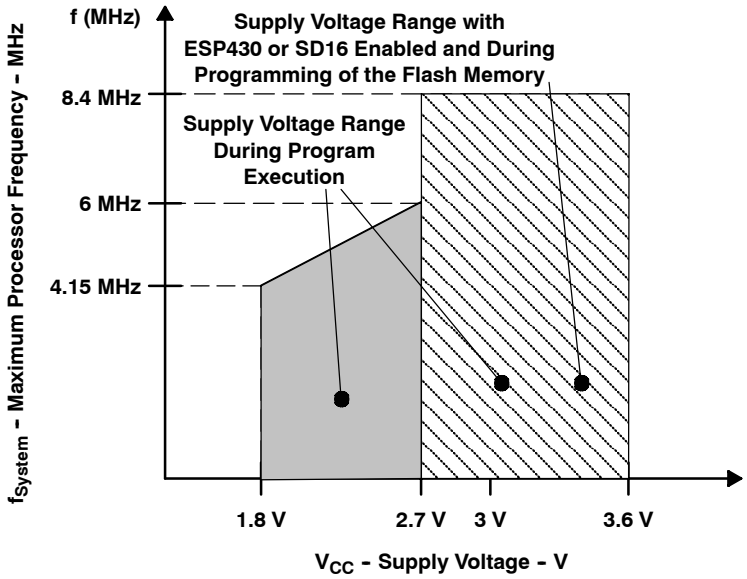

Figure 1. Frequency vs Supply Voltage

electrical characteristics over recommended operating free-air temperature (unless otherwise noted) (continued)

Schmitt-trigger inputs – Ports P1 and P2, $\overline{RST}$/NMI, JTAG (TCK, TMS, TDI/TCLK, TDO/TDI)

PARAMETER		V_{CC}	MIN	TYP	MAX	UNIT
V_{IT+}	Positive-going input threshold voltage	3 V	1.5		1.98	V
V_{IT-}	Negative-going input threshold voltage	3 V	0.9		1.3	V
V_{hys}	Input voltage hysteresis (V_{IT+} – V_{IT-})	3 V	0.45		1	V

inputs Px.x, TAx

PARAMETER		TEST CONDITIONS	V_{CC}	MIN	TYP	MAX	UNIT
$t_{(int)}$	External interrupt timing	Port P1, P2: P1.x to P2.x, External trigger signal for the interrupt flag (see Note 1)	3 V	1.5			cycle
			3 V	50			ns
$t_{(cap)}$	Timer_A, capture timing	TAx	3 V	50			ns
$f_{(TAext)}$	Timer_A clock frequency externally applied to pin	TACLK, INCLK $t_{(H)} = t_{(L)}$	3 V			10	MHz
$f_{(TAint)}$	Timer_A clock frequency	SMCLK or ACLK signal selected	3 V			10	MHz

NOTES: 1. The external signal sets the interrupt flag every time the minimum $t_{(int)}$ cycle and time parameters are met. It may be set even with trigger signals shorter than $t_{(int)}$. Both the cycle and timing specifications must be met to ensure the flag is set. $t_{(int)}$ is measured in MCLK cycles.

leakage current (see Note 1)

PARAMETER			TEST CONDITIONS	V_{CC}	MIN	NOM	MAX	UNIT
$I_{lkg(P1.x)}$	Leakage current	Port P1	Port 1: $V_{(P1.x)}$ (see Note 2)	3 V			±50	nA
$I_{lkg(P2.x)}$		Port P2	Port 2: $V_{(P2.x)}$ (see Note 2)				±50	

NOTES: 1. The leakage current is measured with V_{SS} or V_{CC} applied to the corresponding pin(s), unless otherwise noted.
2. The port pin must be selected as an input.

outputs – Ports P1 and P2

PARAMETER		TEST CONDITIONS	V_{CC}	MIN	TYP	MAX	UNIT
V_{OH}	High-level output voltage	$I_{OH(max)}$ = –1.5 mA (see Note 1)	3 V	V_{CC}–0.25		V_{CC}	V
		$I_{OH(max)}$ = –6 mA (see Note 2)		V_{CC}–0.6		V_{CC}	
V_{OL}	Low-level output voltage	$I_{OL(max)}$ = 1.5 mA (see Note 1)	3 V	V_{SS}		V_{SS}+0.25	V
		$I_{OL(max)}$ = 6 mA (see Note 2)		V_{SS}		V_{SS}+0.6	

NOTES: 1. The maximum total current, $I_{OH(max)}$ and $I_{OL(max)}$, for all outputs combined, should not exceed ±12 mA to satisfy the maximum specified voltage drop.
2. The maximum total current, $I_{OH(max)}$ and $I_{OL(max)}$, for all outputs combined, should not exceed ±48 mA to satisfy the maximum specified voltage drop.

output frequency

PARAMETER		TEST CONDITIONS		V_{CC}	MIN	TYP	MAX	UNIT
$f_{Px.y}$	(1 ≤ x ≤ 2, 0 ≤ y ≤ 7)	C_L = 20 pF, I_L = ±1.5 mA		3 V	dc		12	MHz
f_{ACLK}, f_{MCLK}, f_{SMCLK}	P1.1/TA0/MCLK P1.5/TACLK/ACLK/S28	C_L = 20 pF		3 V			12	MHz
t_{Xdc}	Duty cycle of output frequency	P1.5/TACLK/ACLK/S28, C_L = 20 pF	$f_{ACLK} = f_{LFXT1} = f_{XT1}$	3 V	40%		60%	
			$f_{ACLK} = f_{LFXT1} = f_{LF}$		30%		70%	
			$f_{ACLK} = f_{LFXT1}$			50%		
		P1.1/TA0/MCLK, C_L = 20 pF	$f_{MCLK} = f_{DCOCLK}$		50%– 15 ns	50%	50%+ 15 ns	

electrical characteristics over recommended operating free-air temperature (unless otherwise noted) (continued)

outputs – Ports P1 and P2 (continued)

TYPICAL LOW-LEVEL OUTPUT CURRENT vs LOW-LEVEL OUTPUT VOLTAGE

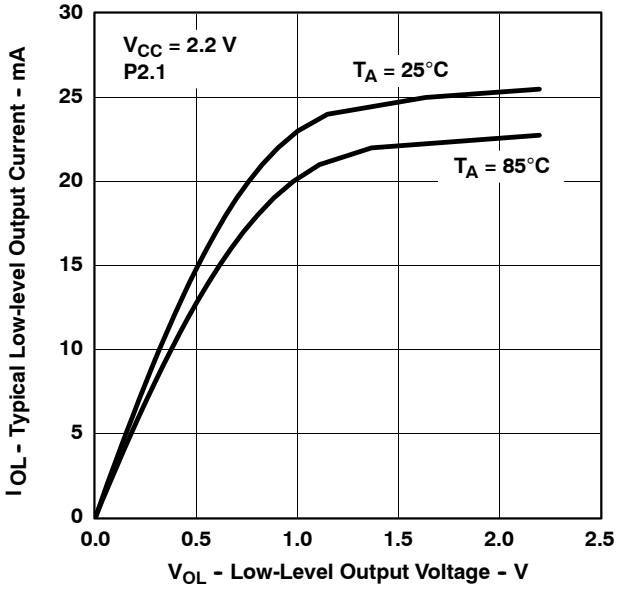

Figure 2

TYPICAL LOW-LEVEL OUTPUT CURRENT vs LOW-LEVEL OUTPUT VOLTAGE

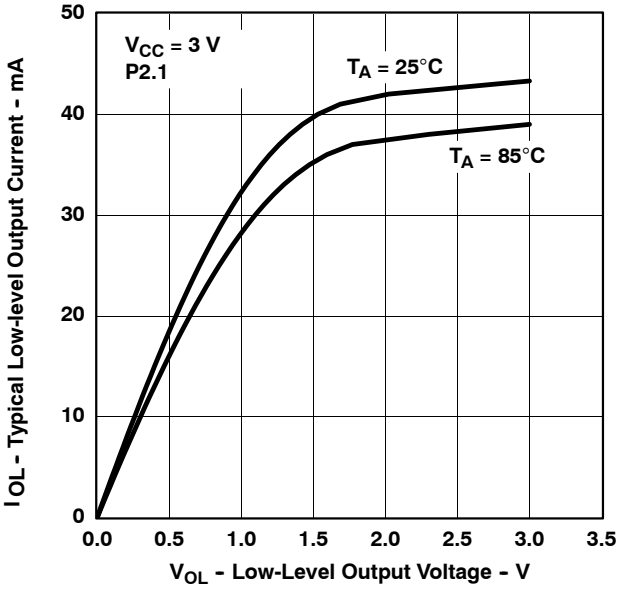

Figure 3

TYPICAL HIGH-LEVEL OUTPUT CURRENT vs HIGH-LEVEL OUTPUT VOLTAGE

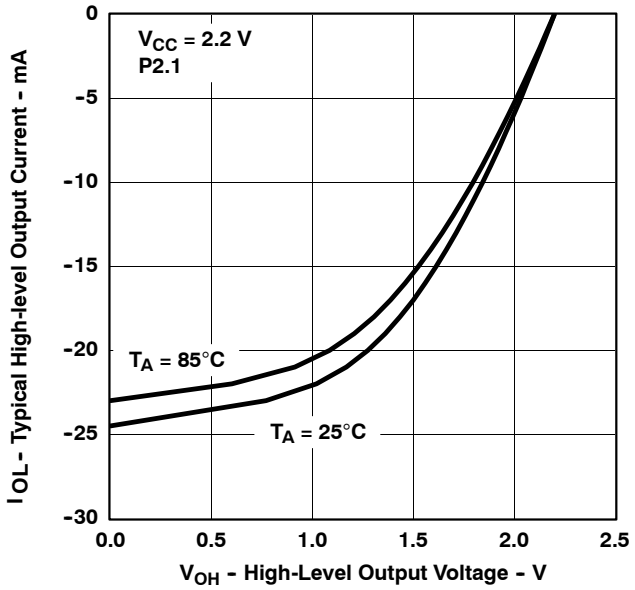

Figure 4

TYPICAL HIGH-LEVEL OUTPUT CURRENT vs HIGH-LEVEL OUTPUT VOLTAGE

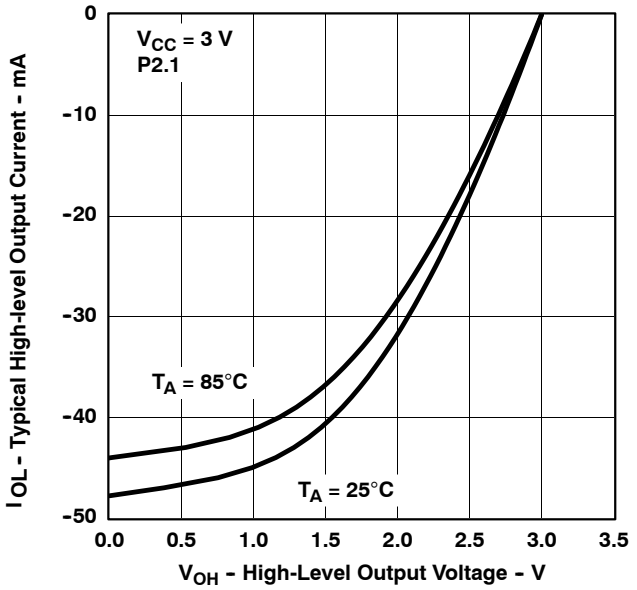

Figure 5

NOTE A. One output loaded at a time

electrical characteristics over recommended operating free-air temperature (unless otherwise noted) (continued)

wake-up LPM3

PARAMETER		TEST CONDITIONS	V_{CC}	MIN	TYP	MAX	UNIT
$t_{d(LPM3)}$	Delay time	f = 1 MHz	3 V			6	µs
		f = 2 MHz				6	
		f = 3 MHz				6	

RAM (see Note 1)

PARAMETER	TEST CONDITIONS	MIN	TYP	MAX	UNIT
VRAMh	CPU halted (see Note 1)	1.6			V

NOTE 1: This parameter defines the minimum supply voltage when the data in the program memory RAM remain unchanged. No program execution should take place during this supply voltage condition.

LCD

PARAMETER		TEST CONDITIONS		MIN	TYP	MAX	UNIT
$V_{(33)}$	Analog voltage	Voltage at R33	V_{CC} = 3 V	2.5		V_{CC} +0.2	V
$V_{(23)}$		Voltage at R23			$(V_{33}-V_{03}) \times 2/3 + V_{03}$		
$V_{(13)}$		Voltage at R13			$(V_{(33)}-V_{(03)}) \times 1/3 + V_{(03)}$		
$V_{(33)} - V_{(03)}$		Voltage at R33/R03		2.5		V_{CC} +0.2	
$I_{(R03)}$	Input leakage	R03 = V_{SS}	No load at all segment and common lines, V_{CC} = 3 V			±20	nA
$I_{(R13)}$		R13 = $V_{CC}/3$				±20	
$I_{(R23)}$		R23 = 2 × $V_{CC}/3$				±20	
$V_{(Sxx0)}$	Segment line voltage	$I_{(Sxx)}$ = –3 µA,	V_{CC} = 3 V	$V_{(03)}$		$V_{(03)}$ – 0.1	V
$V_{(Sxx1)}$				$V_{(13)}$		$V_{(13)}$ – 0.1	
$V_{(Sxx2)}$				$V_{(23)}$		$V_{(23)}$ – 0.1	
$V_{(Sxx3)}$				$V_{(33)}$		$V_{(33)}$ + 0.1	

USART0 (see Note 1)

PARAMETER		TEST CONDITIONS	MIN	NOM	MAX	UNIT
$t_{(\tau)}$	USART0: deglitch time	V_{CC} = 3 V, SYNC = 0, UART mode	150	280	500	ns

NOTE 1: The signal applied to the USART0 receive signal/terminal (URXD0) should meet the timing requirements of $t_{(\tau)}$ to ensure that the URXS flip-flop is set. The URXS flip-flop is set with negative pulses meeting the minimum-timing condition of $t_{(\tau)}$. The operating conditions to set the flag must be met independently from this timing constraint. The deglitch circuitry is active only on negative transitions on the URXD0 line.

POR brownout, reset (see Notes 1 and 2)

PARAMETER		TEST CONDITIONS	MIN	TYP	MAX	UNIT
$t_{d(BOR)}$	Brownout				2000	µs
$V_{CC(start)}$		$dV_{CC}/dt \le 3$ V/s (see Figure 6)		0.7 × $V_{(B_IT-)}$		V
$V_{(B_IT-)}$		$dV_{CC}/dt \le 3$ V/s (see Figure 6, Figure 7, Figure 8)			1.71	V
$V_{hys(B_IT-)}$		$dV_{CC}/dt \le 3$ V/s (see Figure 6)	70	130	180	mV
$t_{(reset)}$		Pulse length needed at $\overline{RST}$/NMI pin to accepted reset internally, V_{CC} = 3 V	2			µs

NOTES: 1. The current consumption of the brownout module is already included in the I_{CC} current consumption data. The voltage level $V_{(B_IT-)} + V_{hys(B_IT-)}$ is ≤ 1.8 V.
2. During power up, the CPU begins code execution following a period of $t_{d(BOR)}$ after $V_{CC} = V_{(B_IT-)} + V_{hys(B_IT-)}$.
The default FLL+ settings must not be changed until $V_{CC} \ge V_{CC(min)}$, where $V_{CC(min)}$ is the minimum supply voltage for the desired operating frequency. See the *MSP430x4xx Family User's Guide* (SLAU056) for more information on the brownout/SVS circuit.

electrical characteristics over recommended operating free-air temperature (unless otherwise noted) (continued)

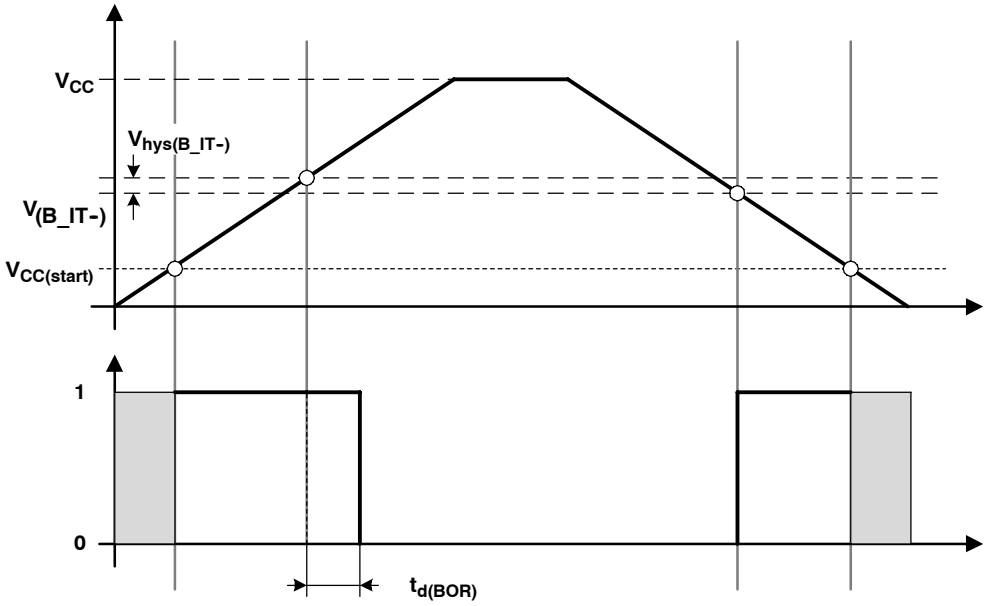

Figure 6. POR/Brownout Reset (BOR) vs Supply Voltage

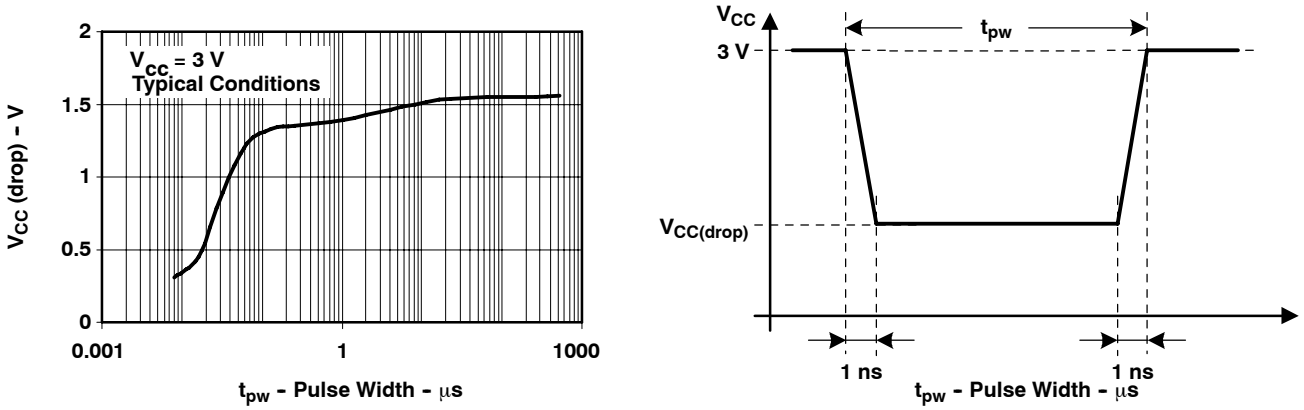

Figure 7. $V_{CC(drop)}$ Level With a Square Voltage Drop to Generate a POR/Brownout Signal

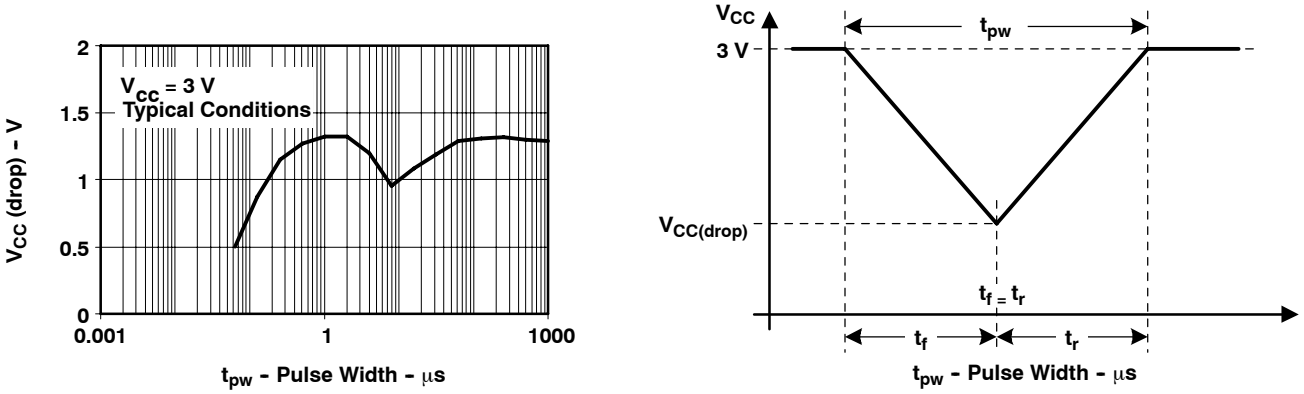

Figure 8. $V_{CC(drop)}$ Level With a Triangle Voltage Drop to Generate a POR/Brownout Signal

electrical characteristics over recommended operating free-air temperature (unless otherwise noted) (continued)

SVS (supply voltage supervisor/monitor) (see Note 1)

PARAMETER	TEST CONDITIONS		MIN	NOM	MAX	UNIT
$t_{(SVSR)4}$	$dV_{CC}/dt > 30$ V/ms (see Figure 9)		5		150	µs
	$dV_{CC}/dt \leq 30$ V/ms				2000	
$t_{d(SVSon)}$	SVSon, switch from VLD = 0 to VLD ≠ 0, V_{CC} = 3 V		20		150	µs
t_{settle}	VLD ≠ 0‡				12	µs
$V_{(SVSstart)}$	VLD ≠ 0, $V_{CC}/dt \leq 3$ V/s (see Figure 9)			1.55	1.7	V
$V_{hys(SVS_IT-)}$	$V_{CC}/dt \leq 3$ V/s (see Figure 9)	VLD = 1	70	120	155	mV
		VLD = 2 to 14	$V_{(SVS_IT-)}$ x 0.001		$V_{(SVS_IT-)}$ x 0.016	
	$V_{CC}/dt \leq 3$ V/s (see Figure 9), external voltage applied on P2.3	VLD = 15	1		20	mV
$V_{(SVS_IT-)}$	$V_{CC}/dt \leq 3$ V/s (see Figure 9)	VLD = 1	1.8	1.9	2.05	V
		VLD = 2	1.94	2.1	2.25	
		VLD = 3	2.05	2.2	2.37	
		VLD = 4	2.14	2.3	2.48	
		VLD = 5	2.24	2.4	2.6	
		VLD = 6	2.33	2.5	2.71	
		VLD = 7	2.46	2.65	2.86	
		VLD = 8	2.58	2.8	3	
		VLD = 9	2.69	2.9	3.13	
		VLD = 10	2.83	3.05	3.29	
		VLD = 11	2.94	3.2	3.42	
		VLD = 12	3.11	3.35	3.61†	
		VLD = 13	3.24	3.5	3.76†	
		VLD = 14	3.43	3.7†	3.99†	
	$V_{CC}/dt \leq 3$ V/s (see Figure 9), external voltage applied on P2.3	VLD = 15	1.1	1.2	1.3	
$I_{CC(SVS)}$ (see Note 1)	VLD ≠ 0, V_{CC} = 2.2 V/3 V			10	15	µA

† The recommended operating voltage range is limited to 3.6 V.

‡ t_{settle} is the settling time that the comparator o/p needs to have a stable level after VLD is switched VLD ≠ 0 to a different VLD value somewhere between 2 and 15. The overdrive is assumed to be > 50 mV.

NOTE 1: The current consumption of the SVS module is not included in the I_{CC} current consumption data.

electrical characteristics over recommended operating free-air temperature (unless otherwise noted) (continued)

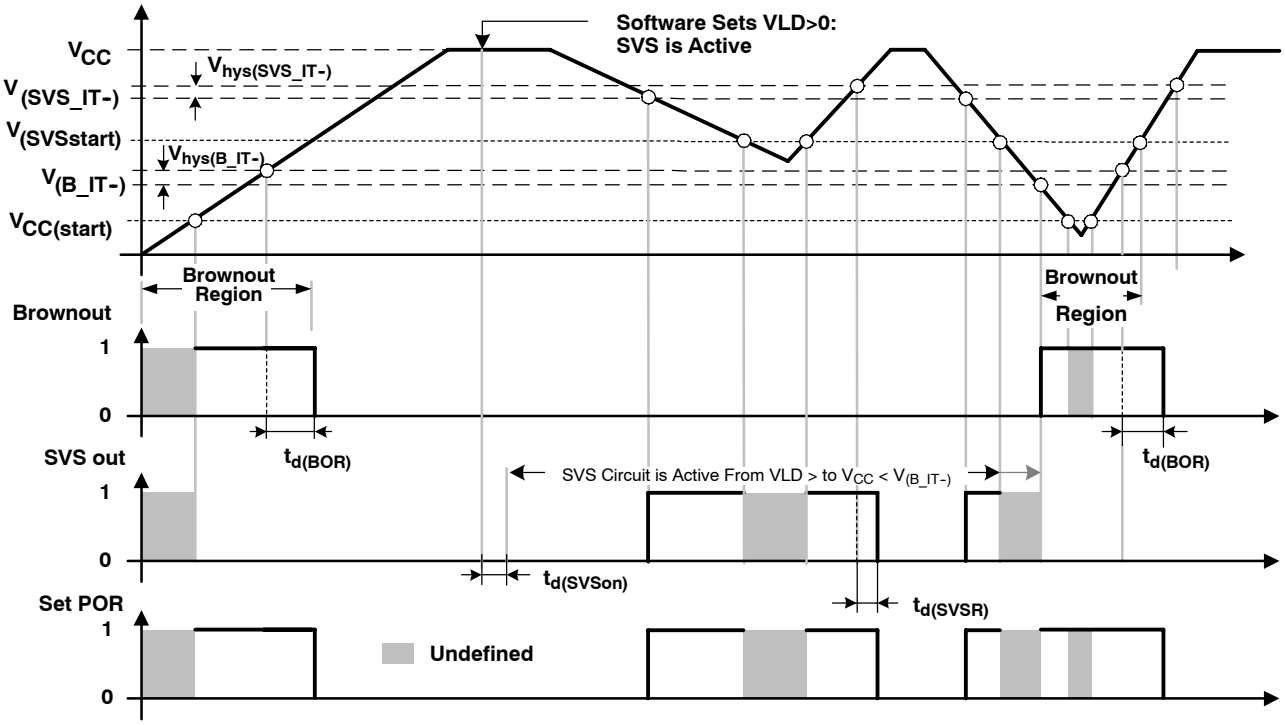

Figure 9. SVS Reset (SVSR) vs Supply Voltage

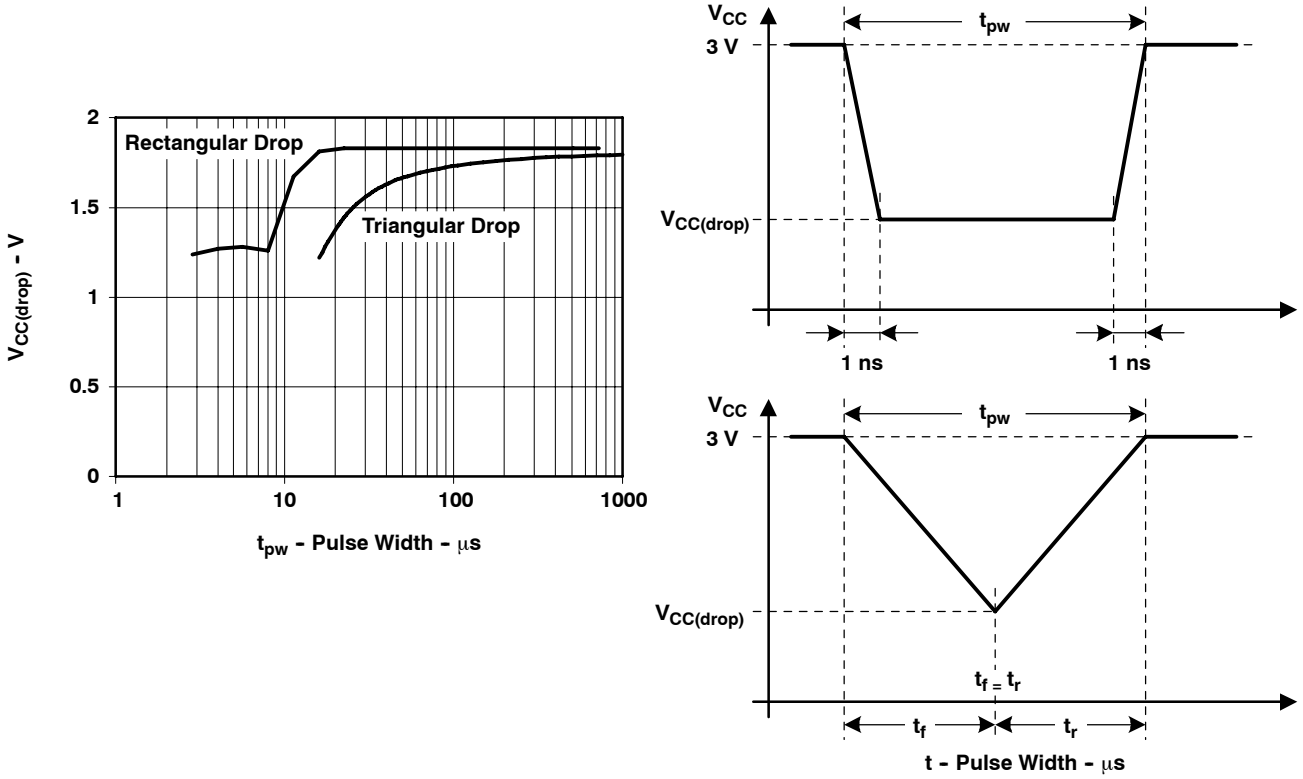

Figure 10. $V_{CC(drop)}$ With a Square Voltage Drop and a Triangle Voltage Drop to Generate an SVS Signal

electrical characteristics over recommended operating free-air temperature (unless otherwise noted) (continued)

DCO

PARAMETER	TEST CONDITIONS		V_{CC}	MIN	TYP	MAX	UNIT
$f_{(DCOCLK)}$	$N_{(DCO)}$ = 01Eh, FN_8 = FN_4 = FN_3 = FN_2 = 0, D = 2; DCOPLUS = 0, $f_{Crystal}$ = 32.768 kHz		3 V		1		MHz
$f_{(DCO = 2)}$	FN_8 = FN_4 = FN_3 = FN_2 = 0 , DCOPLUS = 1		3 V	0.3	0.7	1.3	MHz
$f_{(DCO = 27)}$	FN_8 = FN_4 = FN_3 = FN_2 = 0, DCOPLUS = 1		3 V	2.7	6.1	11.3	MHz
$f_{(DCO = 2)}$	FN_8 = FN_4 = FN_3 = 0, FN_2 = 1, DCOPLUS = 1		3 V	0.8	1.5	2.5	MHz
$f_{(DCO = 27)}$	FN_8 = FN_4 = FN_3 = 0, FN_2 = 1, DCOPLUS = 1		3 V	6.5	12.1	20	MHz
$f_{(DCO = 2)}$	FN_8 = FN_4 = 0, FN_3 = 1, FN_2 = x, DCOPLUS = 1		3 V	1.3	2.2	3.5	MHz
$f_{(DCO = 27)}$	FN_8 = FN_4 = 0, FN_3 = 1, FN_2 = x, DCOPLUS = 1		3 V	10.3	17.9	28.5	MHz
$f_{(DCO = 2)}$	FN_8 = 0, FN_4 = 1, FN_3 = FN_2 = x, DCOPLUS = 1		3 V	2.1	3.4	5.2	MHz
$f_{(DCO = 27)}$	FN_8 = 0, FN_4 = 1, FN_3 = FN_2 = x, DCOPLUS = 1		3 V	16	26.6	41	MHz
$f_{(DCO = 2)}$	FN_8 = 1, FN_4 = FN_3 = FN_2 = x, DCOPLUS = 1		3 V	4.2	6.3	9.2	MHz
$f_{(DCO = 27)}$	FN_8 = 1,FN_4 = FN_3 = FN_2 = x, DCOPLUS = 1		3 V	30	46	70	MHz
S_n	Step size between adjacent DCO taps: $S_n = f_{DCO(Tap\ n+1)} / f_{DCO(Tap\ n)}$ (see Figure 12 for taps 21 to 27)	1 < TAP ≤ 20		1.06		1.11	
		TAP = 27		1.07		1.17	
D_t	Temperature drift, $N_{(DCO)}$ = 01Eh, FN_8 = FN_4 = FN_3 = FN_2 = 0, D = 2, DCOPLUS = 0		3 V	–0.2	–0.3	–0.4	%/°C
D_V	Drift with V_{CC} variation, $N_{(DCO)}$ = 01Eh, FN_8 = FN_4 = FN_3 = FN_2 = 0, D = 2, DCOPLUS = 0			0	5	15	%/V

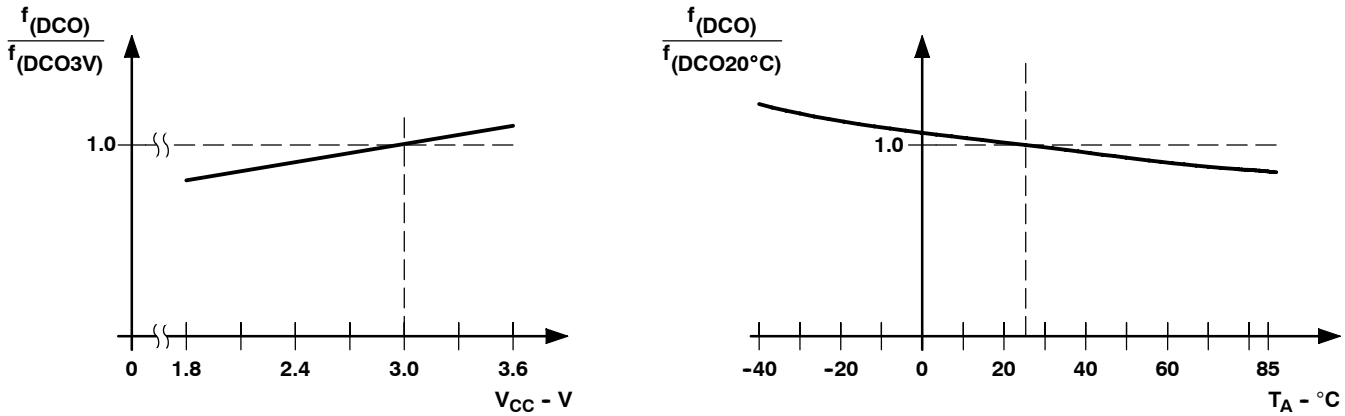

Figure 11. DCO Frequency vs Supply Voltage V_{CC} and vs Ambient Temperature

electrical characteristics over recommended operating free-air temperature (unless otherwise noted) (continued)

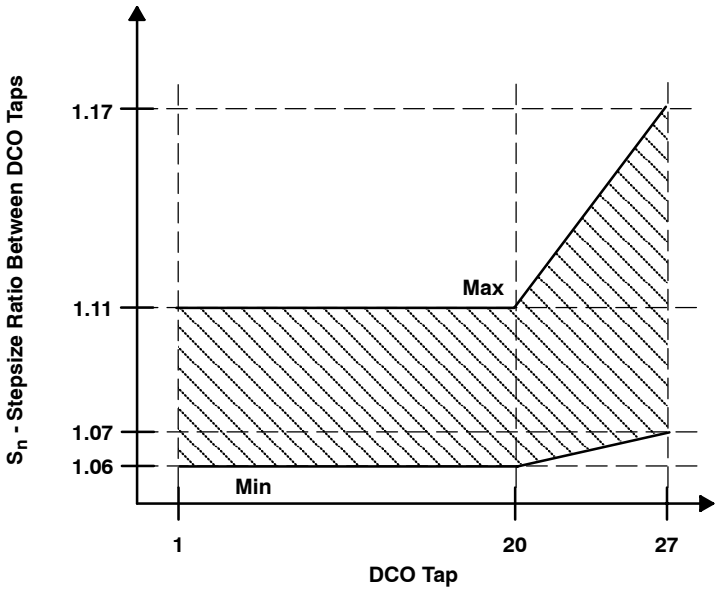

Figure 12. DCO Tap Step Size

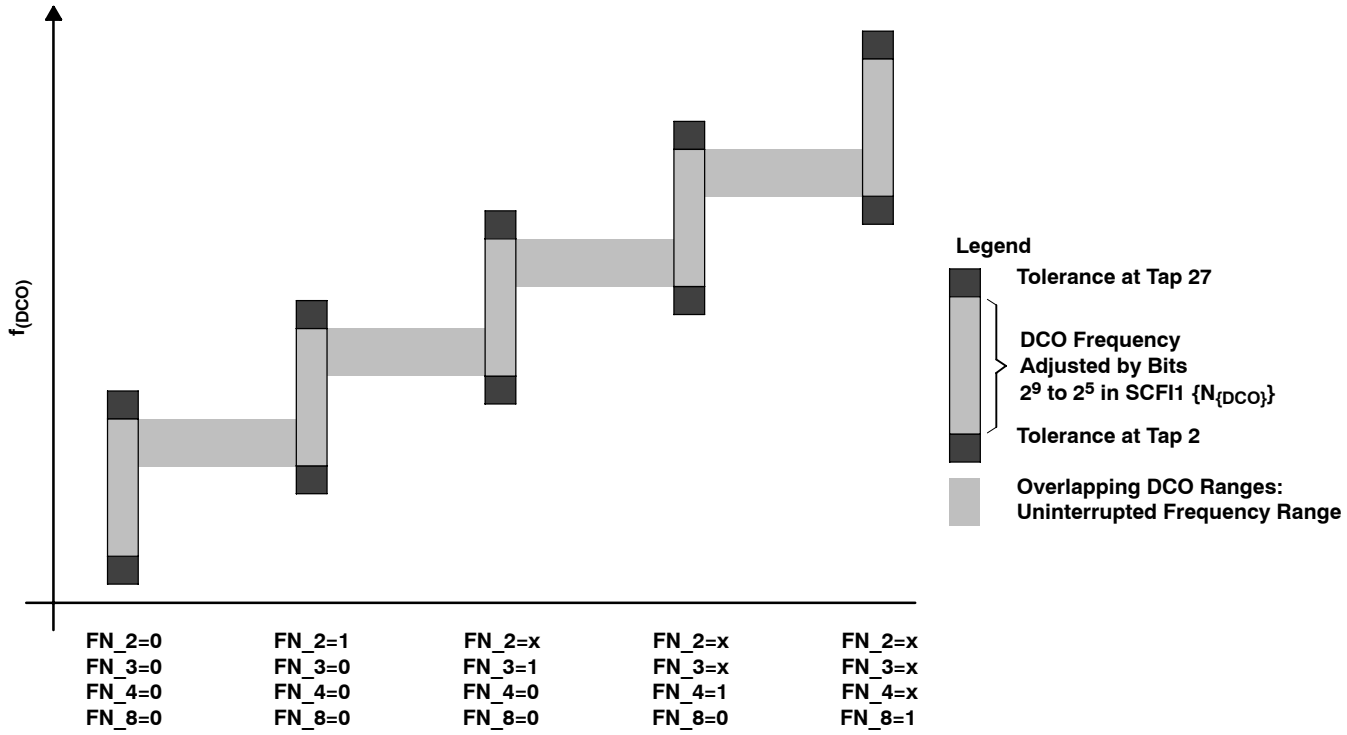

Figure 13. Five Overlapping DCO Ranges Controlled by FN_x Bits

electrical characteristics over recommended operating free-air temperature (unless otherwise noted) (continued)

crystal oscillator, LFXT1 oscillator (see Notes 1 and 2)

PARAMETER		TEST CONDITIONS	V_{CC}	MIN	TYP	MAX	UNIT
C_{XIN}	Integrated input capacitance (see Note 4)	OSCCAPx = 0h	3 V		0		pF
		OSCCAPx = 1h	3 V		10		
		OSCCAPx = 2h	3 V		14		
		OSCCAPx = 3h	3 V		18		
C_{XOUT}	Integrated output capacitance (see Note 4)	OSCCAPx = 0h	3 V		0		pF
		OSCCAPx = 1h	3 V		10		
		OSCCAPx = 2h	3 V		14		
		OSCCAPx = 3h	3 V		18		
V_{IL}	Input levels at XIN	see Note 3	2.2 V/3 V	V_{SS}		$0.2 \times V_{CC}$	V
V_{IH}				$0.8 \times V_{CC}$		V_{CC}	

NOTES:
1. The parasitic capacitance from the package and board may be estimated to be 2pF. The effective load capacitor for the crystal is $(C_{XIN} \times C_{XOUT}) / (C_{XIN} + C_{XOUT})$. It is independent of XTS_FLL .
2. To improve EMI on the low-power LFXT1 oscillator, particularly in the LF mode (32 kHz), the following guidelines must be observed:
   - Keep as short a trace as possible between the ’FE42xA and the crystal.
   - Design a good ground plane around oscillator pins.
   - Prevent crosstalk from other clock or data lines into oscillator pins XIN and XOUT.
   - Avoid running PCB traces underneath or adjacent to XIN an XOUT pins.
   - Use assembly materials and praxis to avoid any parasitic load on the oscillator XIN and XOUT pins.
   - If conformal coating is used, ensure that it does not induce capacitive/resistive leakage between the oscillator pins.
   - Do not route the XOUT line to the JTAG header to support the serial programming adapter as shown in other documentation. This signal is no longer required for the serial programming adapter.
3. Applies only when using an external logic-level clock source. XTS_FLL must be set. Not applicable when using a crystal or resonator.
4. External capacitance is recommended for precision real-time clock applications; OSCCAPx = 0h.

electrical characteristics over recommended operating free-air temperature (unless otherwise noted) (continued)

ESP430CE1A, SD16 and ESP430 power supply and recommended operating conditions

PARAMETER		TEST CONDITIONS		V_{CC}	MIN	TYP	MAX	UNIT
AV_{CC}	Analog supply voltage	$AV_{CC} = DV_{CC}$ $AV_{SS} = DV_{SS} = 0V$			2.7		3.6	V
I_{ESP430}	Total digital and analog supply current when ESP430 and SD16 active ($I_{AVCC} + I_{DVCC}$)	SD16LP = 0, f_{MCLK} = 4MHz, $f_{SD16} = f_{MCLK}/4$, SD16REFON = 1, SD16VMIDON = 0	GAIN(V): 1, GAIN(I1): 1, I2: off	3 V		2.0	2.6	mA
			GAIN(V): 1, GAIN(I1): 32, I2: off	3 V		2.4	3.3	
			GAIN(V): 1, GAIN(I1): 1, GAIN(I2): 1	3 V		2.7	3.6	
			GAIN(V): 1, GAIN(I1): 32, GAIN(I2): 32	3 V		3.4	4.9	
		SD16LP = 1, f_{MCLK} = 2MHz, $f_{SD16} = f_{MCLK}/4$, SD16REFON = 1, SD16VMIDON = 0	GAIN(V): 1, GAIN(I1): 1, I2: off	3 V		1.5	2.1	
			GAIN(V): 1, GAIN(I1): 32, I2: off	3 V		1.6	2.1	
			GAIN(V): 1, GAIN(I1): 1, GAIN(I2): 1	3 V		2.1	2.8	
			GAIN(V): 1, GAIN(I1): 32, GAIN(I2): 32	3 V		2.2	3.0	
I_{SD16}	Analog supply current: 1 active SD16 channel including internal reference (ESP430 disabled)	SD16LP = 0, f_{SD16} = 1 MHz, SD16OSR = 256	GAIN: 1, 2	3 V		650	950	µA
			GAIN: 4, 8, 16	3 V		730	1100	
			GAIN: 32	3 V		1050	1550	
		SD16LP = 1, f_{SD16} = 0.5 MHz, SD16OSR = 256	GAIN: 1	3 V		620	930	
			GAIN: 32	3 V		700	1060	
f_{MAINS}	Mains frequency range				33		80	Hz
f_{SD16}	Analog front-end input clock frequency	SD16LP = 0 (Low power mode disabled)		3 V		1		MHz
		SD16LP = 1 (Low power mode enabled)		3 V		0.5		

ESP430CE1A, SD16 input range (see Note 1)

PARAMETER		TEST CONDITIONS	V_{CC}	MIN	TYP	MAX	UNIT
V_{ID}	Differential input voltage range for specified performance (see Note 2)	SD16GAINx = 1, SD16REFON = 1			±500		mV
		SD16GAINx = 2, SD16REFON = 1			±250		
		SD16GAINx = 4, SD16REFON = 1			±125		
		SD16GAINx = 8, SD16REFON = 1			±62		
		SD16GAINx = 16, SD16REFON = 1			±31		
		SD16GAINx = 32, SD16REFON = 1			±15		
Z_I	Input impedance (one input pin to AV_{SS})	f_{SD16} = 1MHz, SD16GAINx = 1	3 V		200		kΩ
		f_{SD16} = 1MHz, SD16GAINx = 32	3 V		75		
Z_{ID}	Differential Input impedance (IN+ to IN–)	f_{SD16} = 1MHz, SD16GAINx = 1	3 V	300	400		kΩ
		f_{SD16} = 1MHz, SD16GAINx = 32	3 V	100	150		
V_I	Absolute input voltage range			AV_{SS} – 1 V		AV_{CC}	V
V_{IC}	Common-mode input voltage range			AV_{SS} – 1 V		AV_{CC}	V

NOTES: 1. All parameters pertain to each SD16 channel.
2. The analog input range depends on the reference voltage applied to V_{REF}. If V_{REF} is sourced externally, the full-scale range is defined by $V_{FSR+} = +(V_{REF}/2)/GAIN$ and $V_{FSR-} = -(V_{REF}/2)/GAIN$. The analog input range should not exceed 80% of V_{FSR+} or V_{FSR-}.

electrical characteristics over recommended operating free-air temperature (unless otherwise noted) (continued)

ESP430CE1A, SD16 performance (f_{SD16} = 1 MHz, SD16OSRx = 256, SD16REFON = 1)

PARAMETER		TEST CONDITIONS		V_{CC}	MIN	TYP	MAX	UNIT
SINAD	Signal-to-noise + distortion ratio	SD16GAINx = 1,Signal Amplitude = 500mV	f_{IN} = 50 Hz, 100 Hz	3 V	83.5	85		dB
		SD16GAINx = 2,Signal Amplitude = 250mV		3 V	81.5	84		
		SD16GAINx = 4,Signal Amplitude = 125mV		3 V	76	79.5		
		SD16GAINx = 8,Signal Amplitude = 62mV		3 V	73	76.5		
		SD16GAINx = 16,Signal Amplitude = 31mV		3 V	69	73		
		SD16GAINx = 32,Signal Amplitude = 15mV		3 V	62	69		
G	Nominal gain	SD16GAINx = 1		3 V	0.97	1.00	1.02	
		SD16GAINx = 2		3 V	1.90	1.96	2.02	
		SD16GAINx = 4		3 V	3.76	3.86	3.96	
		SD16GAINx = 8		3 V	7.36	7.62	7.84	
		SD16GAINx = 16		3 V	14.56	15.04	15.52	
		SD16GAINx = 32		3 V	27.20	28.35	29.76	
E_{OS}	Offset error	SD16GAINx = 1		3 V			±0.2	%FSR
		SD16GAINx = 32		3 V			±1.5	
dE_{OS}/dT	Offset error temperature coefficient	SD16GAINx = 1		3 V		±4	±20	ppm FSR/°C
		SD16GAINx = 32		3 V		±20	±100	
CMRR	Common-mode rejection ratio	SD16GAINx = 1, Common-mode input signal: V_{ID} = 500 mV, f_{IN} = 50 Hz, 100 Hz		3 V		>90		dB
		SD16GAINx = 32, Common-mode input signal: V_{ID} = 16 mV, f_{IN} = 50 Hz, 100 Hz		3 V		>75		
AC PSRR	AC power supply rejection ratio	SD16GAINx = 1, V_{CC} = 3 V ± 100 mV, f_{VCC} = 50 Hz		3 V		>80		dB
X_T	Crosstalk			3 V		<–100		dB

ESP430CE1A, SD16 temperature sensor

PARAMETER		TEST CONDITIONS	V_{CC}	MIN	TYP	MAX	UNIT
TC_{Sensor}	Sensor temperature coefficient			1.18	1.32	1.46	mV/K
$V_{Offset,sensor}$	Sensor offset voltage			–100		100	mV
V_{Sensor}	Sensor output voltage (see Note 2)	Temperature sensor voltage at T_A = 85°C	3 V	435	475	515	mV
		Temperature sensor voltage at T_A = 25°C	3 V	355	395	435	
		Temperature sensor voltage at T_A = 0°C	3 V	320	360	400	

NOTES: 1. The following formula can be used to calculate the temperature sensor output voltage:
$V_{Sensor,typ} = TC_{Sensor}$ (273 + T [°C]) + $V_{Offset,sensor}$ [mV]
2. Results based on characterization and/or production test, no TC_{Sensor} or $V_{Offset,sensor}$.

electrical characteristics over recommended operating free-air temperature (unless otherwise noted) (continued)

ESP430CE1A, SD16 built-in voltage reference

PARAMETER		TEST CONDITIONS	V_{CC}	MIN	TYP	MAX	UNIT
V_{REF}	Internal reference voltage	SD16REFON = 1, SD16VMIDON = 0	3 V	1.14	1.20	1.26	V
I_{REF}	Reference supply current	SD16REFON = 1, SD16VMIDON = 0	3 V		175	260	µA
TC	Temperature coefficient	SD16REFON = 1, SD16VMIDON = 0 (see Note 1)	3 V		20	50	ppm/K
C_{REF}	V_{REF} load capacitance	SD16REFON = 1, SD16VMIDON = 0 (see Note 2)			100		nF
I_{LOAD}	$V_{REF(I)}$ maximum load current	SD16REFON = 0, SD16VMIDON = 0	3 V			±200	nA
t_{ON}	Turn-on time	SD16REFON = 0 → 1, SD16VMIDON = 0, C_{REF} = 100 nF	3 V		5		ms
DC PSR	DC power supply rejection, $\Delta V_{REF}/\Delta V_{CC}$	SD16REFON = 1, SD16VMIDON = 0, V_{CC} = 2.5 V to 3.6 V			200		µV/V

NOTES: 1. Calculated using the box method: (MAX(–40...85°C) – MIN(–40...85°C)) / MIN(–40...85°C) / (85 – (–40°C))
2. There is no capacitance required on V_{REF}. However, a capacitance of at least 100nF is recommended to reduce any reference voltage noise.

ESP430CE1A, SD16 reference output buffer

PARAMETER		TEST CONDITIONS	V_{CC}	MIN	TYP	MAX	UNIT
$V_{REF,BUF}$	Reference buffer output voltage	SD16REFON = 1, SD16VMIDON = 1	3 V		1.2		V
$I_{REF,BUF}$	Reference supply + reference output buffer quiescent current	SD16REFON = 1, SD16VMIDON = 1	3 V		385	600	µA
$C_{REF(O)}$	Required load capacitance on V_{REF}	SD16REFON = 1, SD16VMIDON = 1		470			nF
$I_{LOAD,Max}$	Maximum load current on V_{REF}	SD16REFON = 1, SD16VMIDON = 1	3 V			±1	mA
	Maximum voltage variation vs load current	$\|I_{LOAD}\|$ = 0 to 1mA	3 V	–15		+15	mV
t_{ON}	Turn-on time	SD16REFON = 0 → 1, SD16VMIDON = 1, C_{REF} = 470 nF	3 V		100		µs

ESP430CE1A, SD16 external reference input

PARAMETER		TEST CONDITIONS	V_{CC}	MIN	TYP	MAX	UNIT
$V_{REF(I)}$	Input voltage range	SD16REFON = 0	3 V	1.0	1.25	1.5	V
$I_{REF(I)}$	Input current	SD16REFON = 0	3 V			50	nA

electrical characteristics over recommended operating free-air temperature (unless otherwise noted) (continued)

ESP430CE1A, active energy measurement test conditions and accuracy, T_A = 25°C (See Note 1)

- f_{ACLK} = 32,768 Hz (watch crystal)
- f_{MCLK} = 4.194MHz (FLL+)
- $f_{SD16} = f_{MCLK}/4$ = 1.049MHz
- Single point calibration at I = 10 A, PF = 0.5 lagging
- Measurements according to IEC1036
- Input conditions (unless otherwise noted):
  I_B = 6 A, $I_{MAX} = n * I_B$ = 60 A, n = 10, V_N = 230 V, f_{MAINS} = 50 Hz

PARAMETER	TEST CONDITIONS		V_{CC}	MIN	TYP	MAX	UNIT
Maximum error	I = 0.05*I_B, V = V_N, PF = 1.0	V1 SD16GAINx = 1 I1 SD16GAINx = 1 See Figure 14: R1 = 0Ω, RB = 12.4Ω	3 V		±0.17		%
	I = 0.1*I_B to I_{MAX}, V = V_N, PF = 1.0		3 V		±0.18		
	I = 0.1*I_B, V = V_N, PF = 0.5 lagging		3 V		±0.19		
	I = 0.2*I_B to I_{MAX}, V = V_N, PF = 0.5 lagging		3 V		±0.27		
	I = 0.1*I_B, V = V_N, PF = 0.8 leading		3 V		±0.15		
	I = 0.2*I_B to I_{MAX}, V = V_N, PF = 0.8 leading		3 V		±0.24		
	I = 0.2*I_B to I_{MAX}, V = V_N, PF = 0.25 lagging		3 V		±0.38		

- Input conditions (unless otherwise noted):
  I_B = 10 A, $I_{MAX} = n * I_B$ = 60 A, n = 6, V_N = 230 V, f_{MAINS} = 50 Hz

PARAMETER	TEST CONDITIONS		V_{CC}	MIN	TYP	MAX	UNIT
Maximum error	I = 0.05*I_B, V = V_N, PF = 1.0	V1 SD16GAINx = 1 I1 SD16GAINx = 32	3 V		±0.11		%
	I = 0.1*I_B to I_{MAX}, V = V_N, PF = 1.0		3 V		±0.18		
	I = 0.1*I_B, V = V_N, PF = 0.5 lagging		3 V		±0.45		
	I = 0.2*I_B to I_{MAX}, V = V_N, PF = 0.5 lagging		3 V		±0.33		
	I = 0.1*I_B, V = V_N, PF = 0.8 leading		3 V		±0.10		
	I = 0.2*I_B to I_{MAX}, V = V_N, PF = 0.8 leading		3 V		±0.18		
	I = 0.2*I_B to I_{MAX}, V = V_N, PF = 0.25 lagging		3 V		±0.51		

NOTES: 1. Measurements performed using complete hardware solution. Error shown contain temperature dependencies of all components including the MSP430FE42xA, crystal, and discrete components.
2. I1 SD16GAIN x = 1,4: CT part number = T60404-E4624-X101 (Vacuumschmelze)
I1 SD16GAINx = 8: shunt part number = A-H2-R005-F1-K2-0.1 (Isabellenhütte Heusler GmbH KG)
I1 SD16GAINx = 32: shunt part number = BVO-M-R0002-5.0 (Isabellenhütte Heusler GmbH KG)

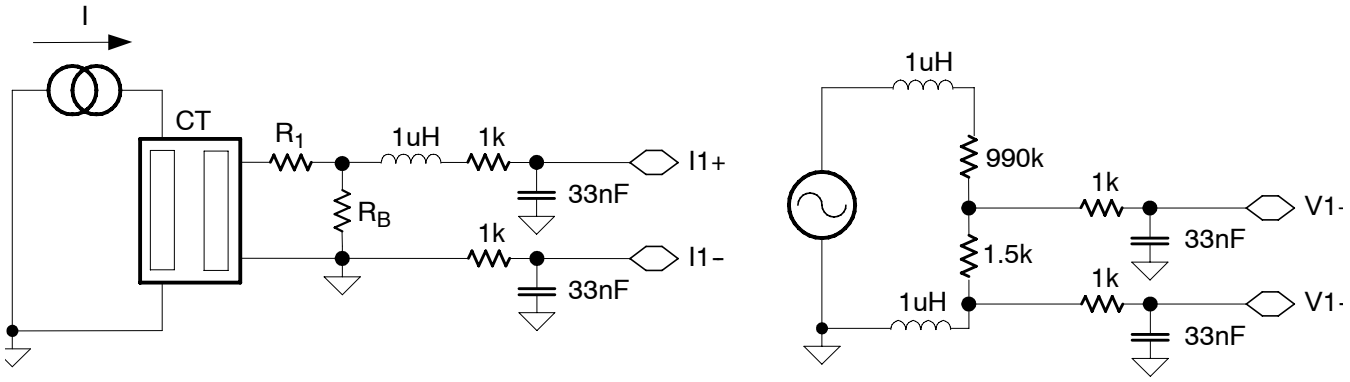

Figure 14. Energy Measurement Test Circuitry (SD16GAINx = 1)

ESP430CE1A (I1 SD16GAINx = 1) typical characteristics (see Note A)

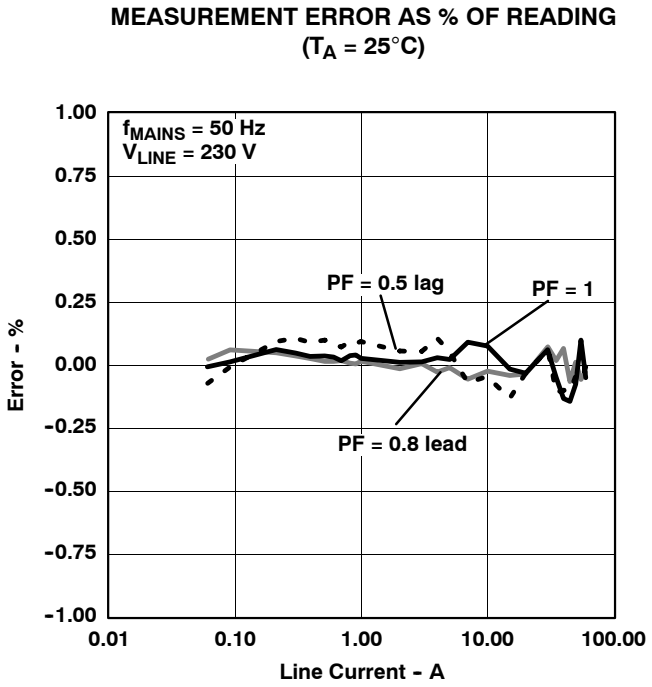

Figure 15

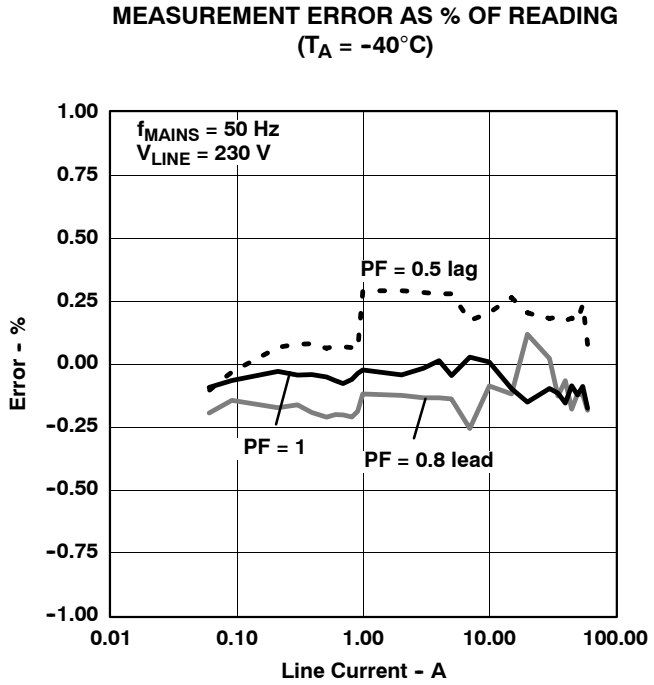

Figure 16

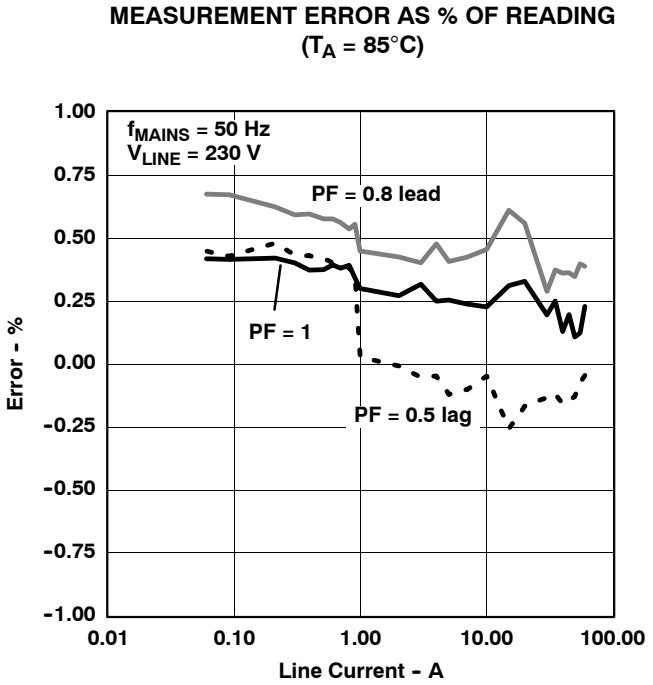

Figure 17

NOTE A. Results corrected for typical phase error of CT used (–40°C to 25°C: –0.7°; 25°C to 85°C: +0.5°).
See Figure 14 for test circuitry: CT part number = T60404–E4624–X101 (Vacuumschmelze), R_1 = 0 Ω, R_B = 12.4 Ω.

electrical characteristics over recommended operating free-air temperature (unless otherwise noted) (continued)

flash memory

PARAMETER		TEST CONDITIONS	V_{CC}	MIN	NOM	MAX	UNIT
$V_{CC(PGM/ERASE)}$	Program and erase supply voltage			2.7		3.6	V
f_{FTG}	Flash timing generator frequency			257		476	kHz
I_{PGM}	Supply current from DV_{CC} during program		2.7 V/ 3.6 V		3	5	mA
I_{ERASE}	Supply current from DV_{CC} during erase		2.7 V/ 3.6 V		3	7	mA
t_{CPT}	Cumulative program time	see Note 1	2.7 V/ 3.6 V			10	ms
$t_{CMErase}$	Cumulative mass erase time	see Note 2	2.7 V/ 3.6 V	200			ms
	Program/erase endurance			10^4	10^5		cycles
$t_{Retention}$	Data retention duration	T_J = 25°C		100			years
t_{Word}	Word or byte program time	see Note 3			35		t_{FTG}
$t_{Block, 0}$	Block program time for 1st byte or word				30		
$t_{Block, 1-63}$	Block program time for each additional byte or word				21		
$t_{Block, End}$	Block program end-sequence wait time				6		
$t_{Mass\ Erase}$	Mass erase time				5297		
$t_{Seg\ Erase}$	Segment erase time				4819		

NOTES: 1. The cumulative programming time must not be exceeded when writing to a 64-byte flash block. This parameter applies to all programming methods: individual word/byte write and block write modes.
2. The mass erase duration generated by the flash timing generator is at least 11.1ms (= 5297x1/f_{FTG},max = 5297x1/476kHz). To achieve the required cumulative mass erase time the Flash Controller's mass erase operation can be repeated until this time is met. (A worst case minimum of 19 cycles are required).
3. These values are hardwired into the Flash Controller's state machine (t_{FTG} = 1/f_{FTG}).

JTAG interface

PARAMETER		TEST CONDITIONS	V_{CC}	MIN	NOM	MAX	UNIT
f_{TCK}	TCK input frequency	see Note 1	2.2 V	0		5	MHz
			3 V	0		10	MHz
$R_{Internal}$	Internal pullup resistance on TMS, TCK, TDI/TCLK	see Note 2	2.2 V/ 3 V	25	60	90	kΩ

NOTES: 1. f_{TCK} may be restricted to meet the timing requirements of the module selected.
2. TMS, TDI/TCLK, and TCK pull-up resistors are implemented in all versions.

JTAG fuse (see Note 1)

PARAMETER		TEST CONDITIONS	V_{CC}	MIN	NOM	MAX	UNIT
$V_{CC(FB)}$	Supply voltage during fuse-blow condition	T_A = 25°C		2.5			V
V_{FB}	Voltage level on TDI/TCLK for fuse-blow			6		7	V
I_{FB}	Supply current into TDI/TCLK during fuse-blow					100	mA
t_{FB}	Time to blow fuse					1	ms

NOTES: 1. Once the fuse is blown, no further access to the MSP430 JTAG/Test and emulation features is possible. The JTAG block is switched to bypass mode.

APPLICATION INFORMATION

input/output schematic

Port P1, P1.0 to P1.1, input/output with Schmitt trigger

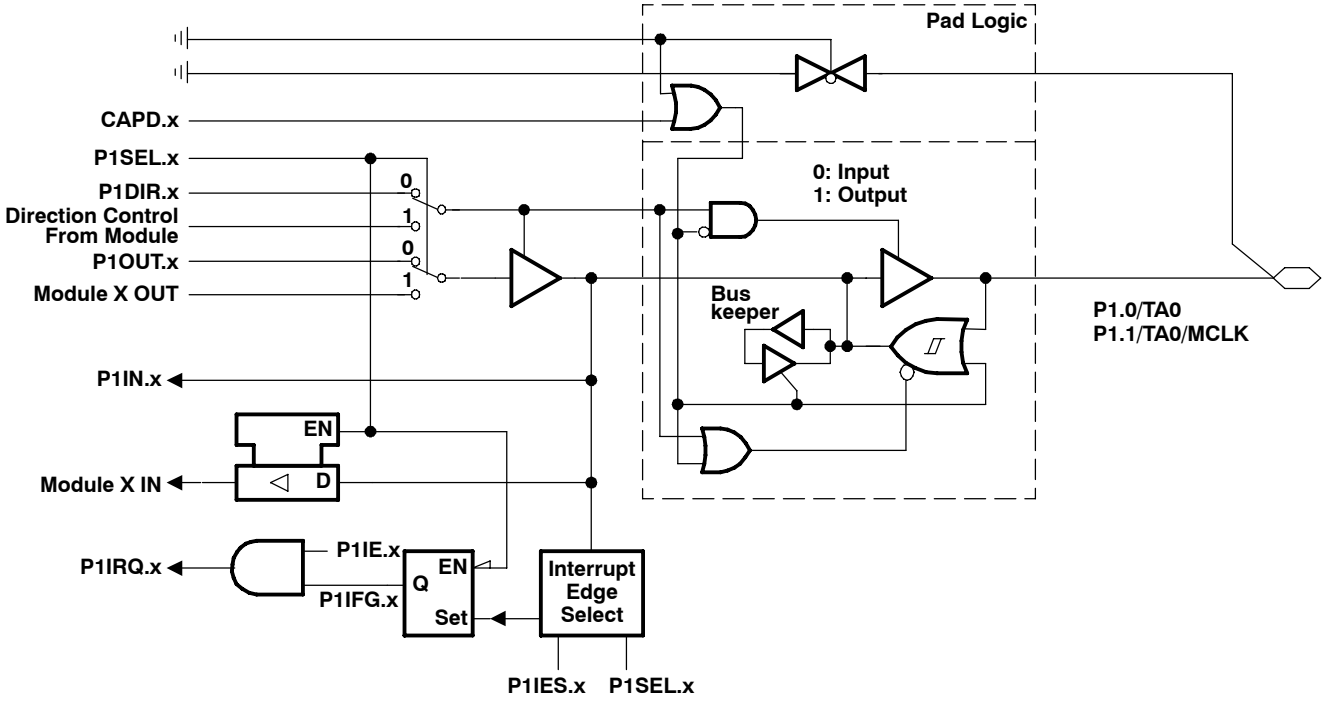

NOTE: $0 \le x \le 1$.
Port Function is Active if CAPD.x = 0

PnSEL.x	PnDIR.x	Direction Control From Module	PnOUT.x	Module X OUT	PnIN.x	Module X IN	PnIE.x	PnIFG.x	PnIES.x	CAPD.x
P1SEL.0	P1DIR.0	P1DIR.0	P1OUT.0	Out0 Sig.†	P1IN.0	CCI0A†	P1IE.0	P1IFG.0	P1IES.0	DVSS
P1SEL.1	P1DIR.1	P1DIR.1	P1OUT.1	MCLK	P1IN.1	CCI0B†	P1IE.1	P1IFG.1	P1IES.1	DVSS

† Timer_A3

APPLICATION INFORMATION

input/output schematic (continued)

Port P1, P1.2 to P1.7, input/output with Schmitt trigger

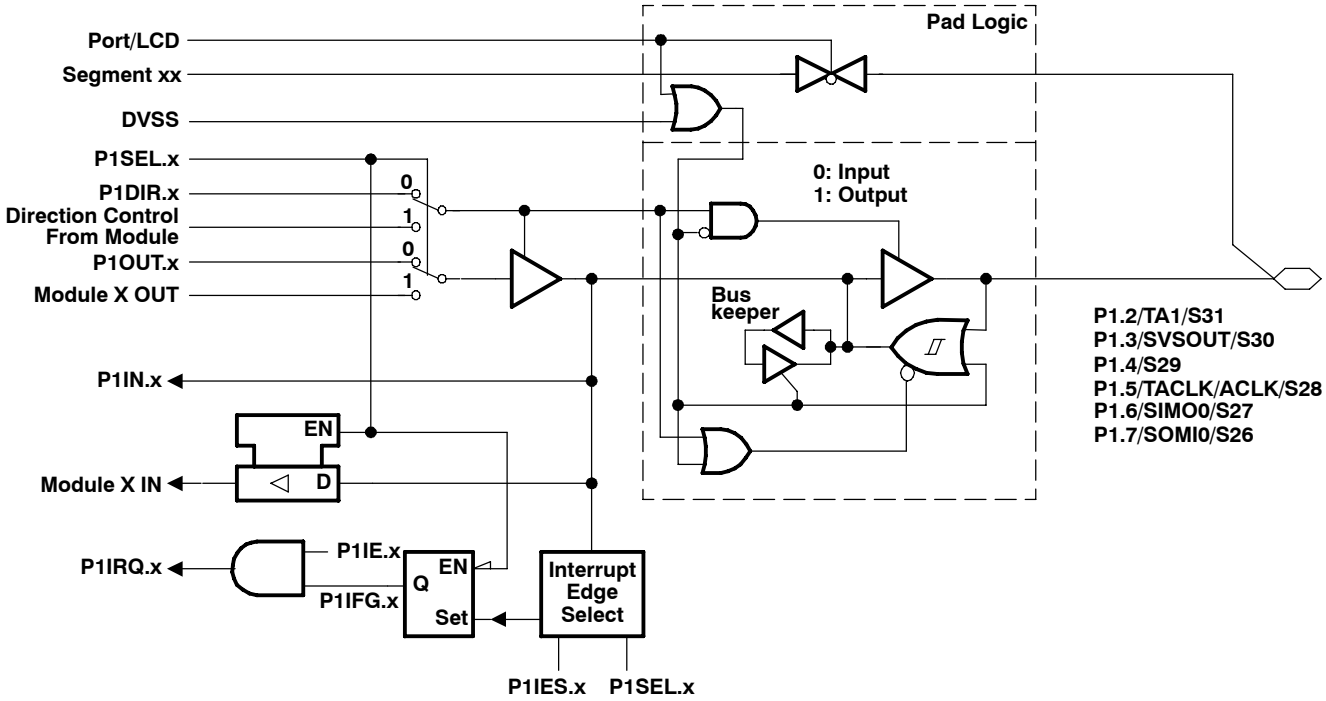

NOTE: $2 \le x \le 7$.
Port Function is Active if Port/LCD = 0

PnSEL.x	PnDIR.x	Direction Control From Module	PnOUT.x	Module X OUT	PnIN.x	Module X IN	PnIE.x	PnIFG.x	PnIES.x	Port/LCD	Segment
P1SEL.2	P1DIR.2	P1DIR.2	P1OUT.2	Out1 Sig.†	P1IN.2	CCI1A†	P1IE.2	P1IFG.2	P1IES.2	0: LCDM < 0E0h 1: LCDM ≥ 0E0h	S31
P1SEL.3	P1DIR.3	P1DIR.3	P1OUT.3	SVSOUT	P1IN.3	unused	P1IE.3	P1IFG.3	P1IES.3		S30
P1SEL.4	P1DIR.4	P1DIR.4	P1OUT.4	DVSS	P1IN.4	unused	P1IE.4	P1IFG.4	P1IES.4		S29
P1SEL.5	P1DIR.5	P1DIR.5	P1OUT.5	ACLK	P1IN.5	TACLK†	P1IE.5	P1IFG.5	P1IES.5		S28
P1SEL.6	P1DIR.6	DCM_SIMO	P1OUT.6	SIMO0(o)‡	P1IN.6	SIMO0(i)‡	P1IE.6	P1IFG.6	P1IES.6	0: LCDM < 0C0h 1: LCDM ≥ 0C0h	S27
P1SEL.7	P1DIR.7	DCM_SOMI	P1OUT.7	SOMI0(o)‡	P1IN.7	SOMI0(i)‡	P1IE.7	P1IFG.7	P1IES.7		S26

† Timer_A3
‡ USART0

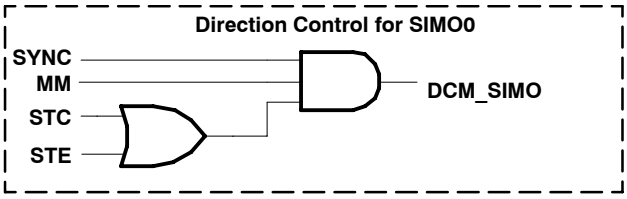

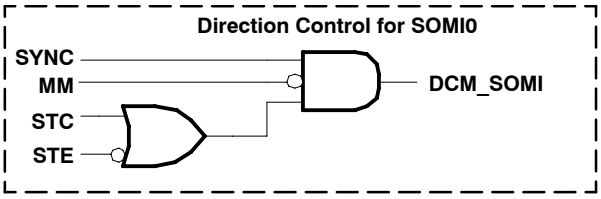

APPLICATION INFORMATION

input/output schematic (continued)

Port P2, P2.0 to P2.1, input/output with Schmitt trigger

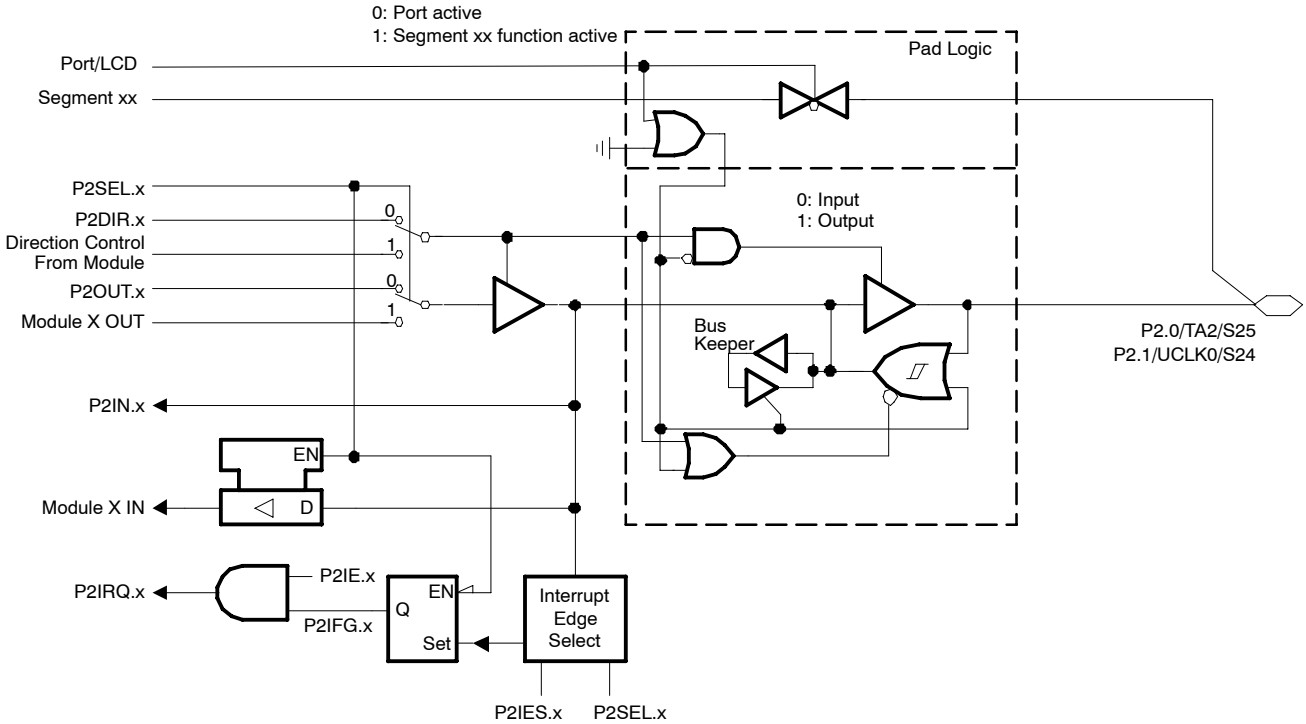

NOTE: $0 \le x \le 1$.
Port Function is Active if Port/LCD = 0

PnSel.x	PnDIR.x	Dir. Control from module	PnOUT.x	Module X OUT	PnIN.x	Module X IN	PnIE.x	PnIFG.x	PnIES.x	Port/LCD	Segment
P2Sel.0	P2DIR.0	P2DIR.0	P2OUT.0	Out2sig.†	P2IN.0	CCI2A †	P2IE.0	P2IFG.0	P2IES.0	0: LCDM < 0E0h	S25
P2Sel.1	P2DIR.1	DCM_UCLK	P2OUT.1	UCLK0(o)‡	P2IN.1	UCLK0(i)‡	P2IE.1	P2IFG.1	P2IES.1	1: LCDM ≥ 0E0h	S24

† Timer_A3
‡ USART0

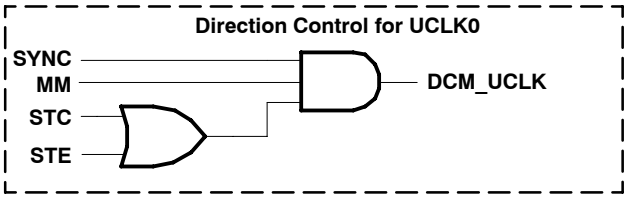

APPLICATION INFORMATION

input/output schematic (continued)

Port P2, P2.2 to P2.5, input/output with Schmitt trigger

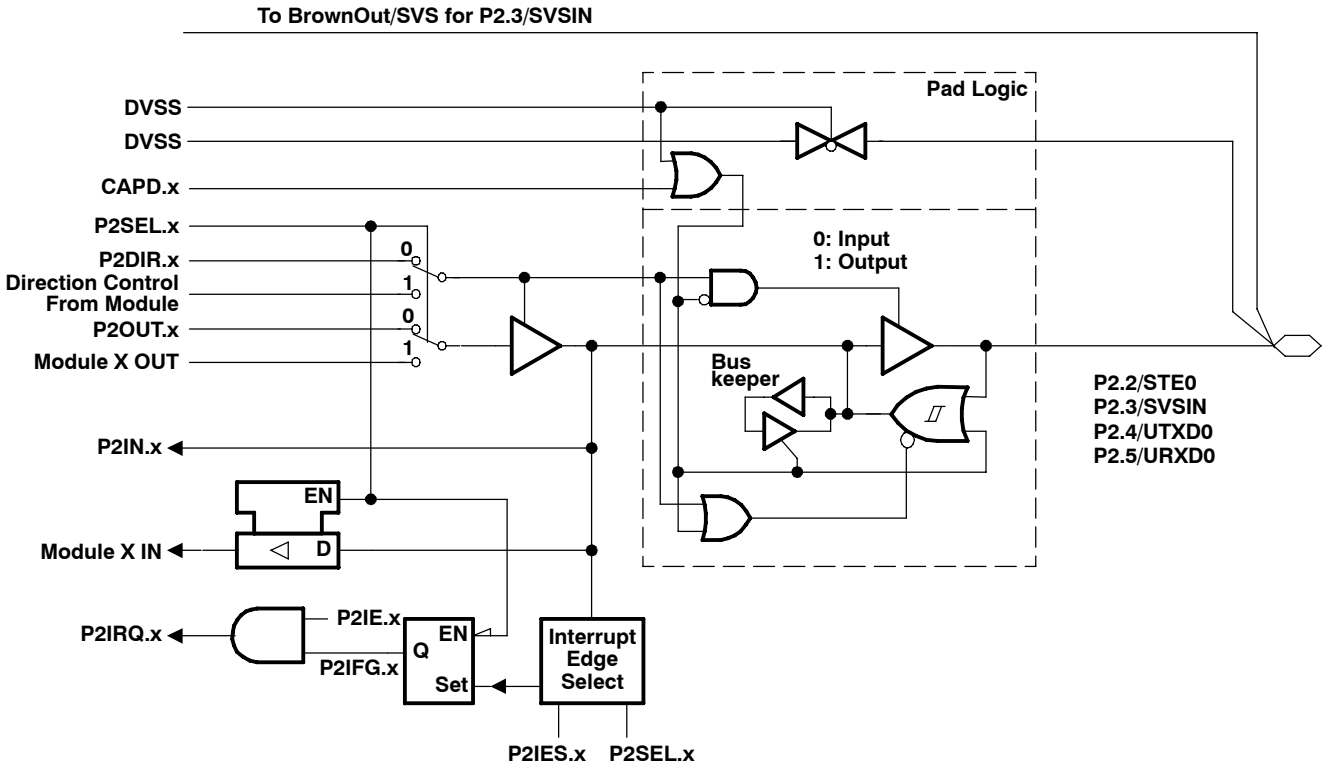

NOTE: $2 \le x \le 5$
Port function is active if CAPD.x = 0

PnSEL.x	PnDIR.x	Direction Control From Module	PnOUT.x	Module X OUT	PnIN.x	Module X IN	PnIE.x	PnIFG.x	PnIES.x	CAPD.x
P2SEL.2	P2DIR.2	DVSS	P2OUT.2	DVSS	P2IN.2	STE0†	P2IE.2	P2IFG.2	P2IES.2	DVSS
P2SEL.3	P2DIR.3	P2DIR.3	P2OUT.3	DVSS	P2IN.3	unused	P2IE.3	P2IFG.3	P2IES.3	SVSCTL VLD = 1111b
P2SEL.4	P2DIR.4	DVCC	P2OUT.4	UTXD0†	P2IN.4	unused	P2IE.4	P2IFG.4	P2IES.4	DVSS
P2SEL.5	P2DIR.5	DVSS	P2OUT.5	DVSS	P2IN.5	URXD0†	P2IE.5	P2IFG.5	P2IES.5	DVSS

† USART0

APPLICATION INFORMATION

input/output schematic (continued)

Port P2, unbonded GPIOs P2.6 and P2.7

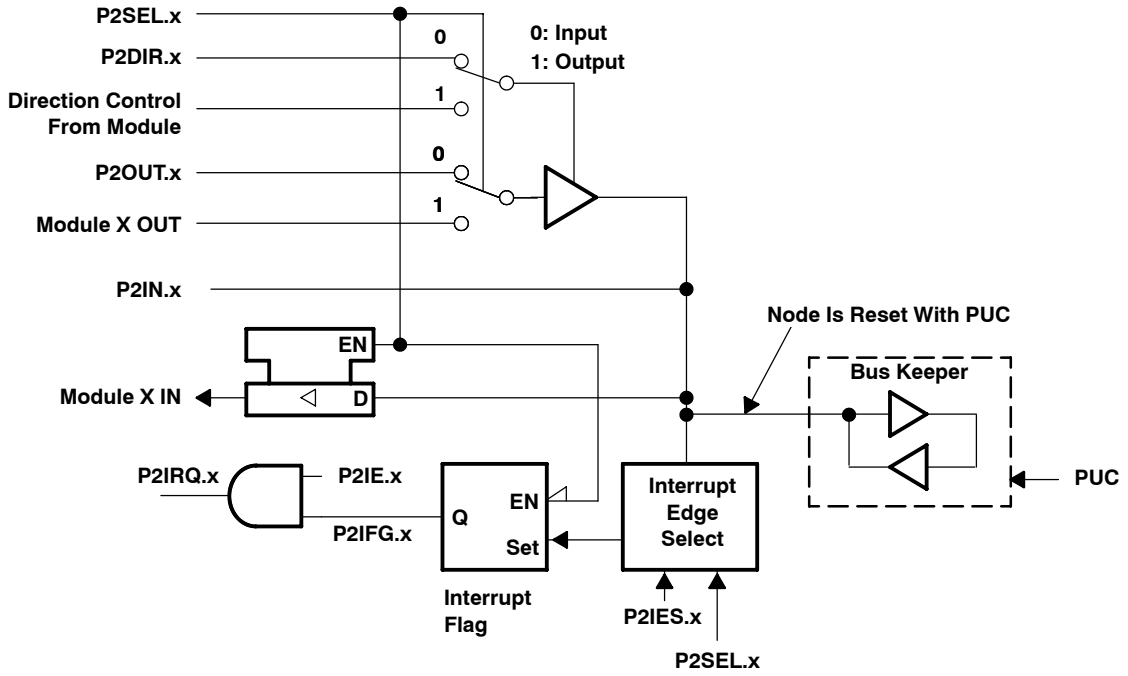

NOTE: x = Bit/identifier, 6 to 7 for port P2 without external pins

P2Sel.x	P2DIR.x	DIRECTION CONTROL FROM MODULE	P2OUT.x	MODULE X OUT	P2IN.x	MODULE X IN	P2IE.x	P2IFG.x	P2IES.x
P2Sel.6	P2DIR.6	P2DIR.6	P2OUT.6	DV_{SS}	P2IN.6	unused	P2IE.6	P2IFG.6	P2IES.6
P2Sel.7	P2DIR.7	P2DIR.7	P2OUT.7	DV_{SS}	P2IN.7	unused	P2IE.7	P2IFG.7	P2IES.7

NOTE: Unbonded GPIOs 6 and 7 of port P2 can be used as interrupt flags. Only software can affect the interrupt flags. They work as software interrupts.

APPLICATION INFORMATION

JTAG pins (TMS, TCK, TDI/TCLK, TDO/TDI), input/output with Schmitt trigger or output

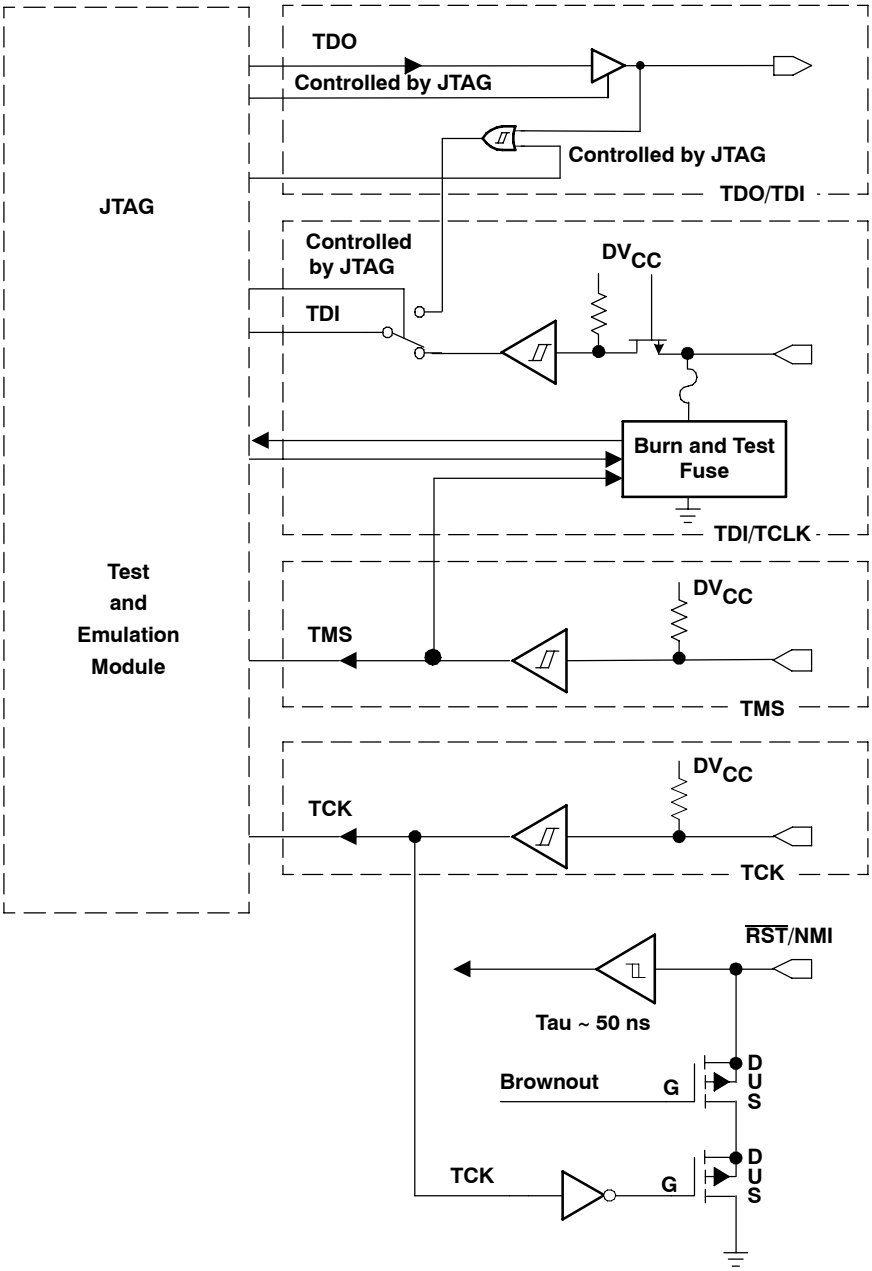

APPLICATION INFORMATION

JTAG fuse check mode

MSP430 devices that have the fuse on the TDI/TCLK terminal have a fuse check mode that tests the continuity of the fuse the first time the JTAG port is accessed after a power-on reset (POR). When activated, a fuse check current, I_{TF}, of 1.8 mA at 3 V can flow from the TDI/TCLK pin to ground if the fuse is not burned. Care must be taken to avoid accidentally activating the fuse check mode and increasing overall system power consumption.

Activation of the fuse check mode occurs with the first negative edge on the TMS pin after power up or if the TMS is being held low during power up. The second positive edge on the TMS pin deactivates the fuse check mode. After deactivation, the fuse check mode remains inactive until another POR occurs. After each POR the fuse check mode has the potential to be activated.

The fuse check current only flows when the fuse check mode is active and the TMS pin is in a low state (see Figure 18). Therefore, the additional current flow can be prevented by holding the TMS pin high (default condition).

The JTAG pins are terminated internally, and therefore do not require external termination.

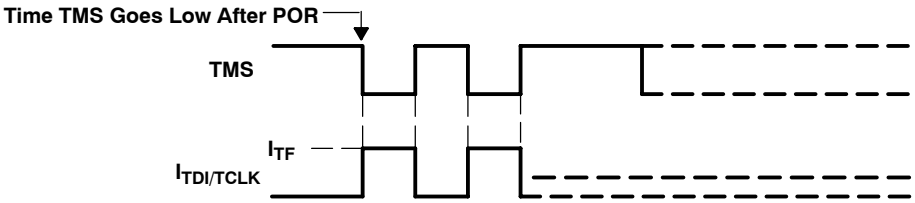

Figure 18. Fuse Check Mode Current, MSP430FE42xA

Data Sheet Revision History

Literature Number	Summary
SLAS588	Production data sheet release

NOTE: The referring page and figure numbers are referred to the respective document revision.

Corrections to MSP430FE42xA Data Sheet (SLAS588)

Document Being Updated: *MSP430FE42xA Mixed Signal Microcontroller*

Literature Number Being Updated: SLAS588

Page	Change or Add
35	In the table for "Port P1, P1.2 to P1.7, input/output with Schmitt trigger": *Port/LCD* (the column heading) should be changed to **$\overline{\text{Port}}$/LCD**. *0: LCDM < 0E0h, 1: LCDM ≥ 0E0h* should be changed to **0: LCDPx < 05h, 1: LCDPx ≥ 05h**. *0: LCDM < 0C0h, 1: LCDM ≥ 0C0h* should be changed to **0: LCDPx < 04h, 1: LCDPx ≥ 04h**.
36	In the table for "Port P2, P2.0 to P2.1, input/output with Schmitt trigger": *Port/LCD* (the column heading) should be changed to **$\overline{\text{Port}}$/LCD**. *0: LCDM < 0C0h, 1: LCDM ≥ 0C0h* should be changed to **0: LCDPx < 04h, 1: LCDPx ≥ 04h**.

Copyright © 2013, Texas Instruments Incorporated

PACKAGING INFORMATION

Orderable Device	Status (1)	Package Type	Package Drawing	Pins	Package Qty	Eco Plan (2)	Lead finish/ Ball material (6)	MSL Peak Temp (3)	Op Temp (°C)	Device Marking (4/5)	Samples
MSP430FE423AIPM	ACTIVE	LQFP	PM	64	160	RoHS & Green	NIPDAU	Level-3-260C-168 HR	-40 to 85	M430FE423A	Samples
MSP430FE423AIPMR	ACTIVE	LQFP	PM	64	1000	RoHS & Green	NIPDAU	Level-3-260C-168 HR	-40 to 85	M430FE423A	Samples
MSP430FE425AIPM	ACTIVE	LQFP	PM	64	160	RoHS & Green	NIPDAU	Level-3-260C-168 HR	-40 to 85	M430FE425A	Samples
MSP430FE425AIPMR	ACTIVE	LQFP	PM	64	1000	RoHS & Green	NIPDAU	Level-3-260C-168 HR	-40 to 85	M430FE425A	Samples
MSP430FE427AIPM	ACTIVE	LQFP	PM	64	160	RoHS & Green	NIPDAU	Level-3-260C-168 HR	-40 to 85	M430FE427A	Samples
MSP430FE427AIPMR	ACTIVE	LQFP	PM	64	1000	RoHS & Green	NIPDAU	Level-3-260C-168 HR	-40 to 85	M430FE427A	Samples

(1) The marketing status values are defined as follows:
ACTIVE: Product device recommended for new designs.
LIFEBUY: TI has announced that the device will be discontinued, and a lifetime-buy period is in effect.
NRND: Not recommended for new designs. Device is in production to support existing customers, but TI does not recommend using this part in a new design.
PREVIEW: Device has been announced but is not in production. Samples may or may not be available.
OBSOLETE: TI has discontinued the production of the device.

(2) **RoHS:** TI defines "RoHS" to mean semiconductor products that are compliant with the current EU RoHS requirements for all 10 RoHS substances, including the requirement that RoHS substance do not exceed 0.1% by weight in homogeneous materials. Where designed to be soldered at high temperatures, "RoHS" products are suitable for use in specified lead-free processes. TI may reference these types of products as "Pb-Free".
RoHS Exempt: TI defines "RoHS Exempt" to mean products that contain lead but are compliant with EU RoHS pursuant to a specific EU RoHS exemption.
Green: TI defines "Green" to mean the content of Chlorine (Cl) and Bromine (Br) based flame retardants meet JS709B low halogen requirements of <=1000ppm threshold. Antimony trioxide based flame retardants must also meet the <=1000ppm threshold requirement.

(3) MSL, Peak Temp. - The Moisture Sensitivity Level rating according to the JEDEC industry standard classifications, and peak solder temperature.

(4) There may be additional marking, which relates to the logo, the lot trace code information, or the environmental category on the device.

(5) Multiple Device Markings will be inside parentheses. Only one Device Marking contained in parentheses and separated by a "~" will appear on a device. If a line is indented then it is a continuation of the previous line and the two combined represent the entire Device Marking for that device.

(6) Lead finish/Ball material - Orderable Devices may have multiple material finish options. Finish options are separated by a vertical ruled line. Lead finish/Ball material values may wrap to two lines if the finish value exceeds the maximum column width.

Important Information and Disclaimer: The information provided on this page represents TI's knowledge and belief as of the date that it is provided. TI bases its knowledge and belief on information provided by third parties, and makes no representation or warranty as to the accuracy of such information. Efforts are underway to better integrate information from third parties. TI has taken and continues to take reasonable steps to provide representative and accurate information but may not have conducted destructive testing or chemical analysis on incoming materials and chemicals. TI and TI suppliers consider certain information to be proprietary, and thus CAS numbers and other limited information may not be available for release.

In no event shall TI's liability arising out of such information exceed the total purchase price of the TI part(s) at issue in this document sold by TI to Customer on an annual basis.

TAPE AND REEL INFORMATION

REEL DIMENSIONS

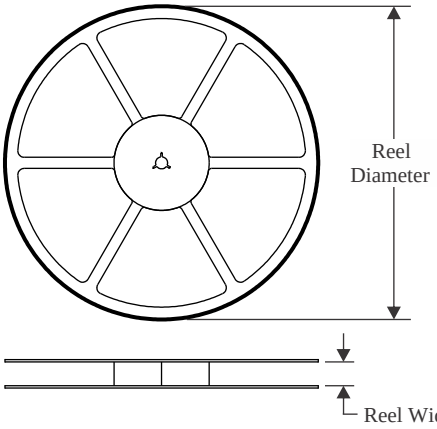

TAPE DIMENSIONS

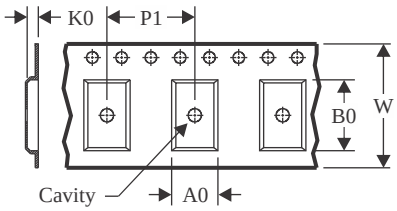

A0	Dimension designed to accommodate the component width
B0	Dimension designed to accommodate the component length
K0	Dimension designed to accommodate the component thickness
W	Overall width of the carrier tape
P1	Pitch between successive cavity centers

QUADRANT ASSIGNMENTS FOR PIN 1 ORIENTATION IN TAPE

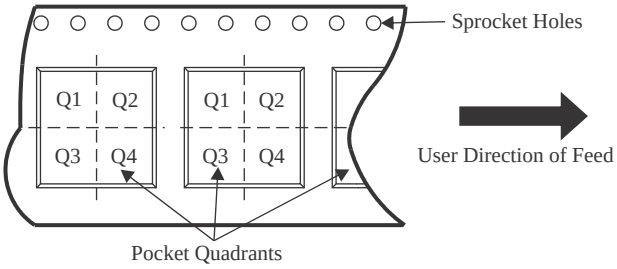

*All dimensions are nominal

Device	Package Type	Package Drawing	Pins	SPQ	Reel Diameter (mm)	Reel Width W1 (mm)	A0 (mm)	B0 (mm)	K0 (mm)	P1 (mm)	W (mm)	Pin1 Quadrant
MSP430FE423AIPMR	LQFP	PM	64	1000	330.0	24.4	13.0	13.0	2.1	16.0	24.0	Q2
MSP430FE425AIPMR	LQFP	PM	64	1000	330.0	24.4	13.0	13.0	2.1	16.0	24.0	Q2
MSP430FE427AIPMR	LQFP	PM	64	1000	330.0	24.4	13.0	13.0	2.1	16.0	24.0	Q2

TAPE AND REEL BOX DIMENSIONS

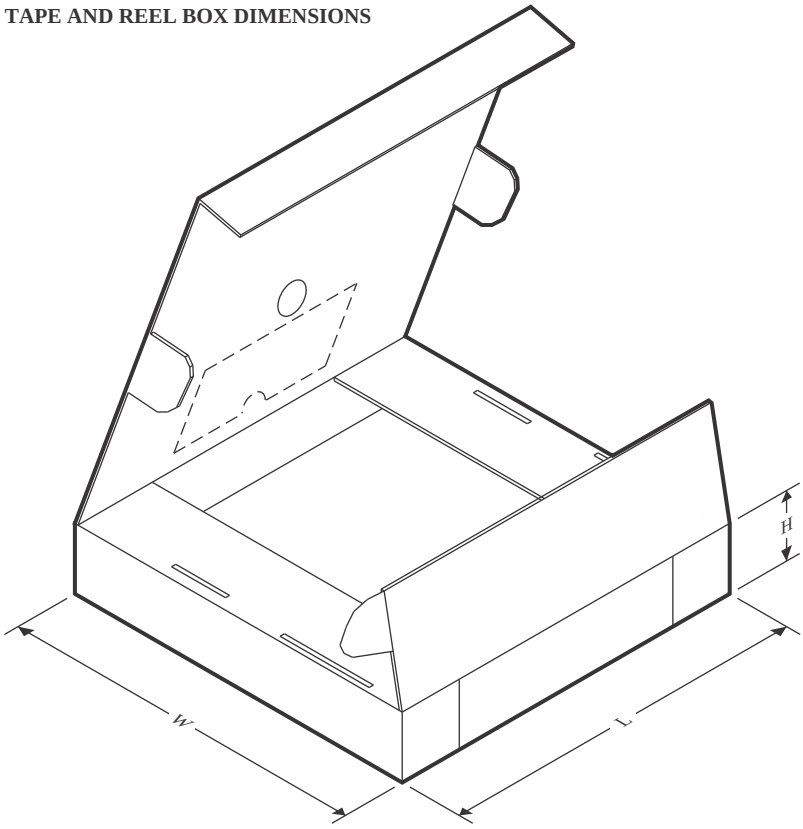

*All dimensions are nominal

Device	Package Type	Package Drawing	Pins	SPQ	Length (mm)	Width (mm)	Height (mm)
MSP430FE423AIPMR	LQFP	PM	64	1000	336.6	336.6	41.3
MSP430FE425AIPMR	LQFP	PM	64	1000	336.6	336.6	41.3
MSP430FE427AIPMR	LQFP	PM	64	1000	336.6	336.6	41.3

TRAY

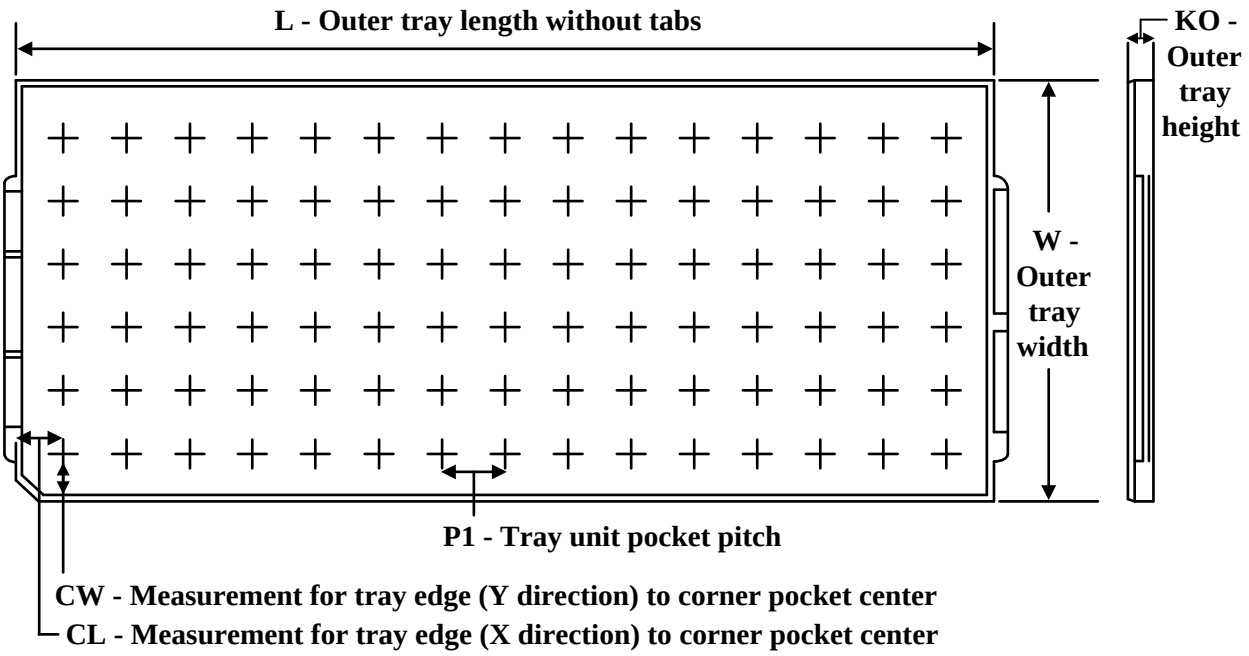

Chamfer on Tray corner indicates Pin 1 orientation of packed units.

*All dimensions are nominal

Device	Package Name	Package Type	Pins	SPQ	Unit array matrix	Max temperature (°C)	L (mm)	W (mm)	K0 (µm)	P1 (mm)	CL (mm)	CW (mm)
MSP430FE423AIPM	PM	LQFP	64	160	8 X 20	150	315	135.9	7620	15.2	13.1	13
MSP430FE423AIPM	PM	LQFP	64	160	8 x 20	150	315	135.9	7620	15.2	13.1	13
MSP430FE425AIPM	PM	LQFP	64	160	8 X 20	150	315	135.9	7620	15.2	13.1	13
MSP430FE425AIPM	PM	LQFP	64	160	8 x 20	150	315	135.9	7620	15.2	13.1	13
MSP430FE427AIPM	PM	LQFP	64	160	8 X 20	150	315	135.9	7620	15.2	13.1	13
MSP430FE427AIPM	PM	LQFP	64	160	8 x 20	150	315	135.9	7620	15.2	13.1	13

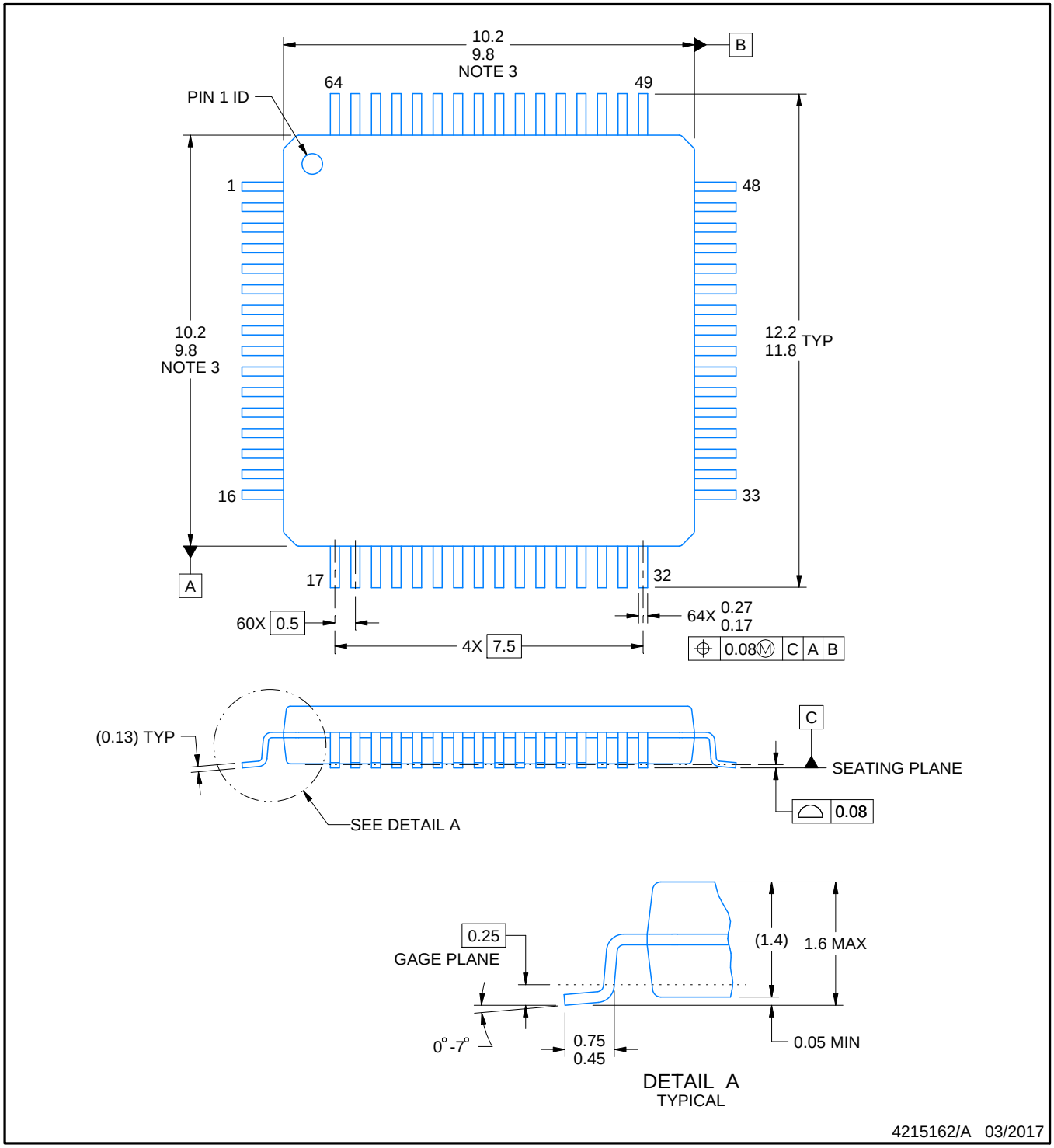

NOTES:

1. All linear dimensions are in millimeters. Any dimensions in parenthesis are for reference only. Dimensioning and tolerancing per ASME Y14.5M.
2. This drawing is subject to change without notice.
3. This dimension does not include mold flash, protrusions, or gate burrs. Mold flash, protrusions, or gate burrs shall not exceed 0.15 mm per side.
4. Reference JEDEC registration MS-026.

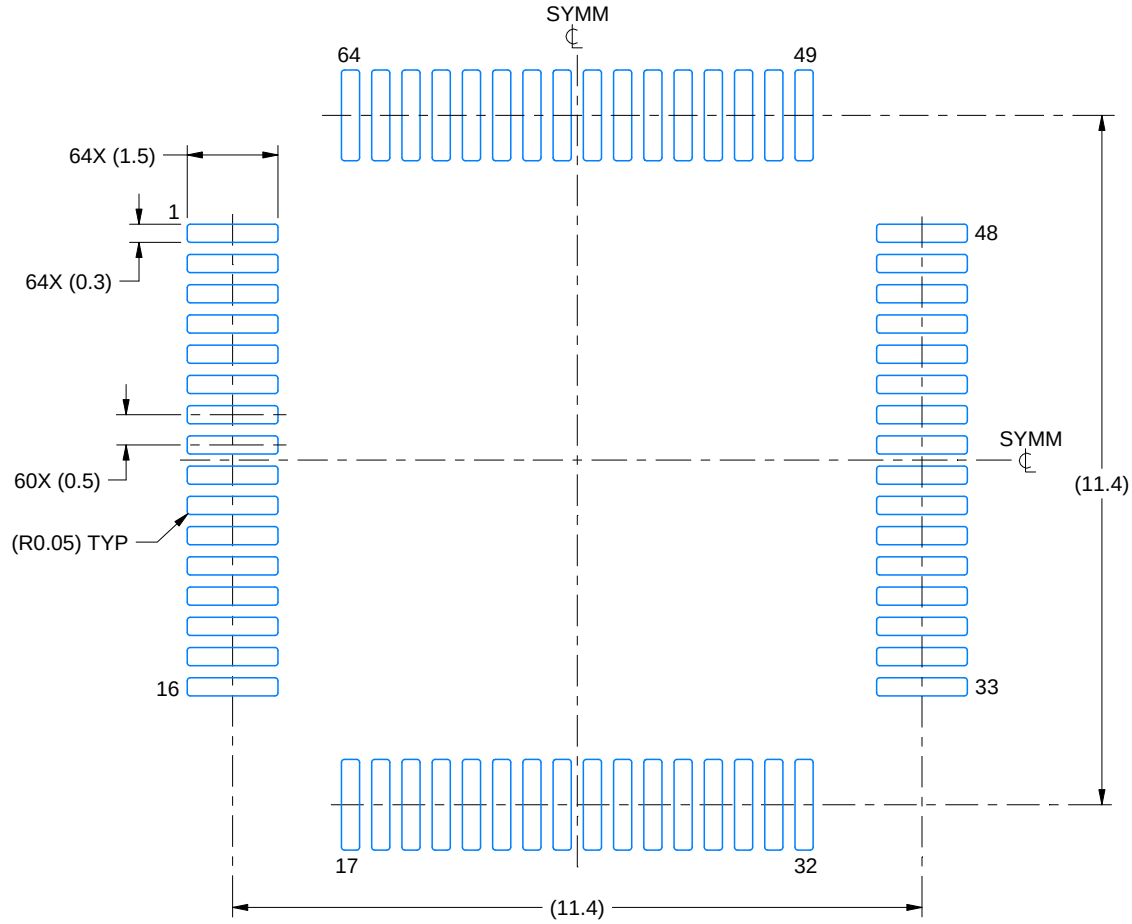

LAND PATTERN EXAMPLE
EXPOSED METAL SHOWN
SCALE:8X

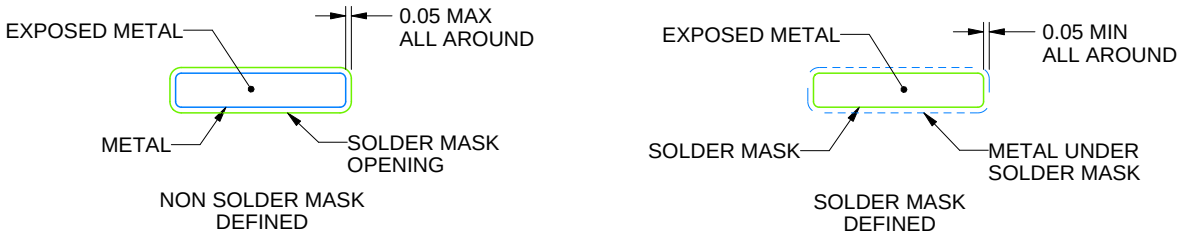

SOLDER MASK DETAILS

4215162/A 03/2017

NOTES: (continued)

5. Publication IPC-7351 may have alternate designs.
6. Solder mask tolerances between and around signal pads can vary based on board fabrication site.
7. For more information, see Texas Instruments literature number SLMA004 (www.ti.com/lit/slma004).

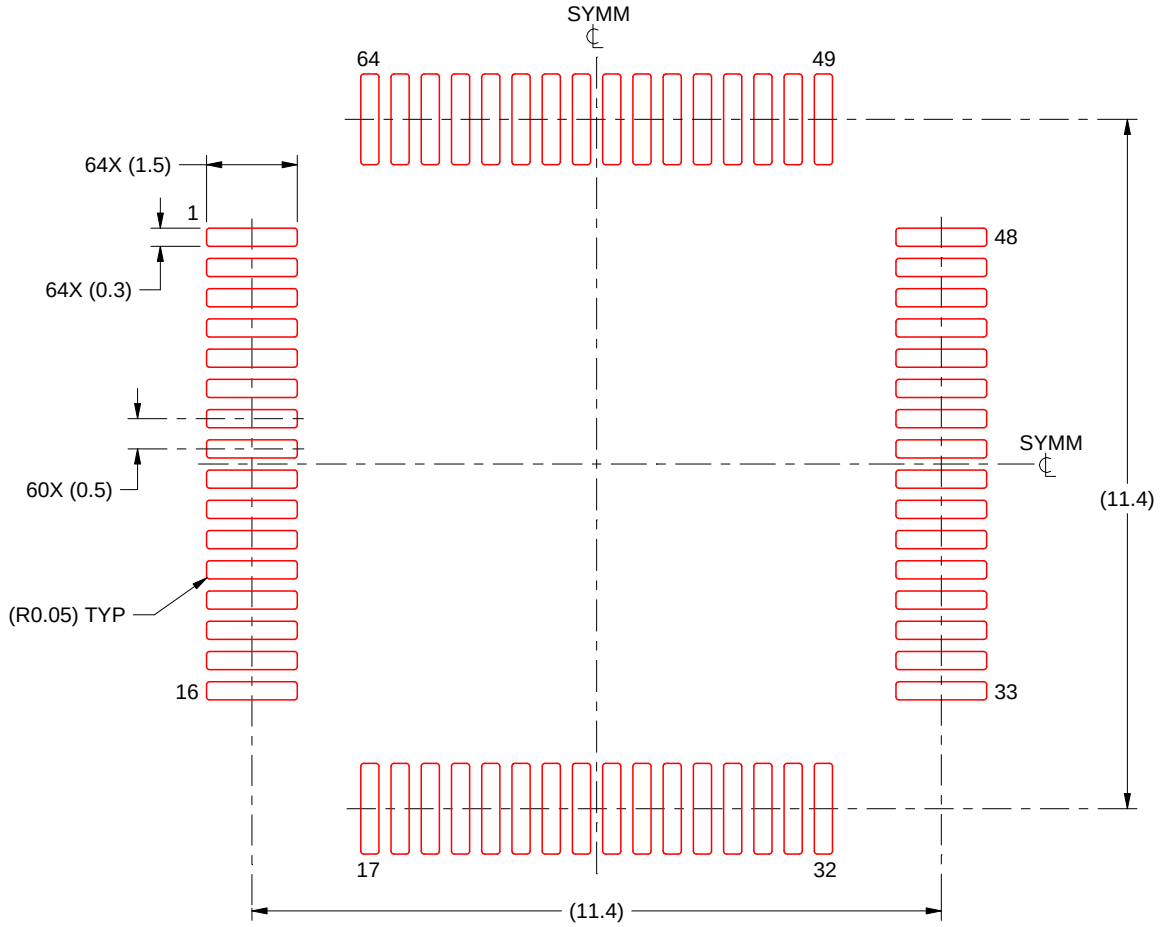

SOLDER PASTE EXAMPLE
BASED ON 0.125 mm THICK STENCIL
SCALE:8X

4215162/A 03/2017

NOTES: (continued)

8. Laser cutting apertures with trapezoidal walls and rounded corners may offer better paste release. IPC-7525 may have alternate design recommendations.
9. Board assembly site may have different recommendations for stencil design.

IMPORTANT NOTICE AND DISCLAIMER

TI PROVIDES TECHNICAL AND RELIABILITY DATA (INCLUDING DATA SHEETS), DESIGN RESOURCES (INCLUDING REFERENCE DESIGNS), APPLICATION OR OTHER DESIGN ADVICE, WEB TOOLS, SAFETY INFORMATION, AND OTHER RESOURCES “AS IS” AND WITH ALL FAULTS, AND DISCLAIMS ALL WARRANTIES, EXPRESS AND IMPLIED, INCLUDING WITHOUT LIMITATION ANY IMPLIED WARRANTIES OF MERCHANTABILITY, FITNESS FOR A PARTICULAR PURPOSE OR NON-INFRINGEMENT OF THIRD PARTY INTELLECTUAL PROPERTY RIGHTS.

These resources are intended for skilled developers designing with TI products. You are solely responsible for (1) selecting the appropriate TI products for your application, (2) designing, validating and testing your application, and (3) ensuring your application meets applicable standards, and any other safety, security, regulatory or other requirements.

These resources are subject to change without notice. TI grants you permission to use these resources only for development of an application that uses the TI products described in the resource. Other reproduction and display of these resources is prohibited. No license is granted to any other TI intellectual property right or to any third party intellectual property right. TI disclaims responsibility for, and you will fully indemnify TI and its representatives against, any claims, damages, costs, losses, and liabilities arising out of your use of these resources.

TI’s products are provided subject to TI’s Terms of Sale or other applicable terms available either on ti.com or provided in conjunction with such TI products. TI’s provision of these resources does not expand or otherwise alter TI’s applicable warranties or warranty disclaimers for TI products.

TI objects to and rejects any additional or different terms you may have proposed.

Mailing Address: Texas Instruments, Post Office Box 655303, Dallas, Texas 75265
Copyright © 2024, Texas Instruments Incorporated